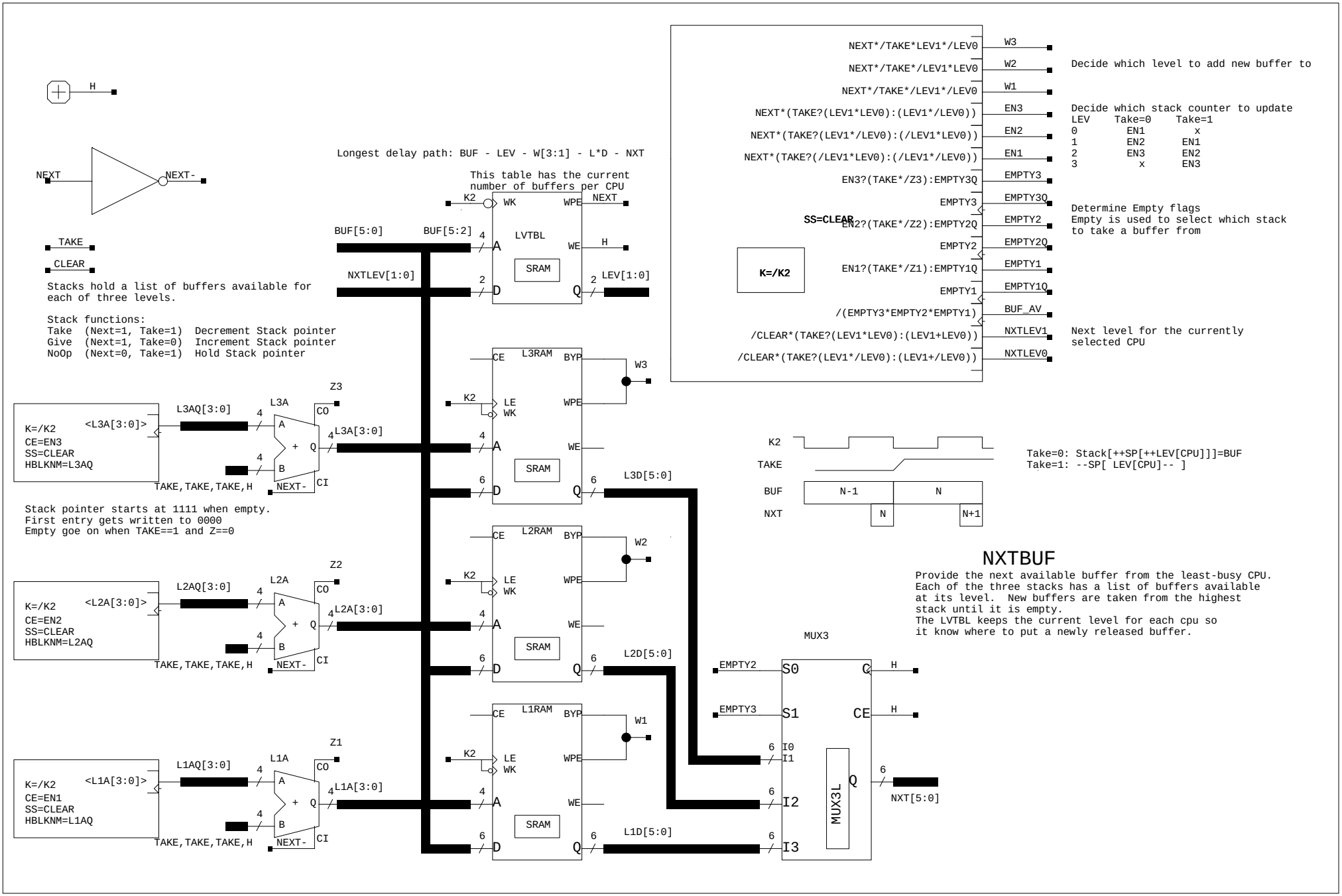
H
NEXT
NEXT-
TAKE
CLEAR
Stacks hold a list of buffers available for each of three levels.
Stack functions:
Take (Next=1, Take=1) Decrement Stack pointer
Give (Next=1, Take=0) Increment Stack pointer
NoOp (Next=0, Take=1) Hold Stack pointer
Longest delay path: BUF - LEV - W[3:1] - L*D - NXT
This table has the current number of buffers per CPU
K2
WK
WPE
NEXT
BUF[5:0]
BUF[5:2]
LVTBL
WE
H
SRAM
NXTLEV[1:0]
LEV[1:0]
NEXT*/TAKE*LEV1*/LEV0
NEXT*/TAKE*/LEV1*LEV0
NEXT*/TAKE*/LEV1*/LEV0
NEXT*(TAKE?(LEV1*LEV0):(LEV1*/LEV0))
NEXT*(TAKE?(LEV1*/LEV0):(/LEV1*LEV0))
NEXT*(TAKE?(/LEV1*LEV0):(/LEV1*/LEV0))
EN3?(TAKE*/Z3):EMPTY3Q
EMPTY3
EN2?(TAKE*/Z2):EMPTY2Q
EMPTY2
EN1?(TAKE*/Z1):EMPTY1Q
EMPTY1
/(EMPTY3*EMPTY2*EMPTY1)
/CLEAR*(TAKE?(LEV1*LEV0):(LEV1+LEV0))
/CLEAR*(TAKE?(LEV1*/LEV0):(LEV1+/LEV0))
W3
W2
W1
EN3
EN2
EN1
EMPTY3Q
EMPTY2Q
EMPTY1Q
BUF_AV
NXTLEV1
NXTLEV0
SS=CLEAR
K=/K2
Decide which level to add new buffer to
Decide which stack counter to update
LEV Take=0 Take=1
0 EN1 x
1 EN2 EN1
2 EN3 EN2
3 x EN3
Determine Empty flags
Empty is used to select which stack to take a buffer from
Next level for the currently selected CPU
L3RAM
CE
LE
BYP
L3D[5:0]
L2RAM
L2D[5:0]
L1RAM
L1D[5:0]
Z3
L3A
L3AQ[3:0]
L3A[3:0]
K=/K2
CE=EN3
SS=CLEAR
HBLKNM=L3AQ
<L3A[3:0]>
CO
CI
TAKE,TAKE,TAKE,H
NEXT-
Stack pointer starts at 1111 when empty.
First entry gets written to 0000
Empty goe on when TAKE==1 and Z==0
Z2
L2A
L2AQ[3:0]
L2A[3:0]
K=/K2
CE=EN2
SS=CLEAR
HBLKNM=L2AQ
<L2A[3:0]>
Z1
L1A
L1AQ[3:0]
L1A[3:0]
K=/K2
CE=EN1
SS=CLEAR
HBLKNM=L1AQ
<L1A[3:0]>
K2
TAKE
BUF
NXT
N-1
N
N+1
Take=0: Stack[++SP[++LEV[CPU]]]=BUF
Take=1: --SP[LEV[CPU]--]
NXTBUF
Provide the next available buffer from the least-busy CPU.
Each of the three stacks has a list of buffers available at its level. New buffers are taken from the highest stack until it is empty.
The LVTBL keeps the current level for each cpu so it know where to put a newly released buffer.
MUX3
EMPTY2
EMPTY3
S0
S1
I0
I1
I2
I3
MUX3L
NXT[5:0]