Fermi National Accelerator Laboratory

Main Injector Electronics

Beam Position Monitor Transition Board System
Power Supply and Power Harness ECO

Date: July 4th, 2006
Revision Date: July 17th, 2006

Stefano M RAPISARDA, Bill W HAYNES, Vince PAVLICEK

Document # Beam-doc-2349-v2

TABLE OF CONTENTS

1 INTRODUCTION 1

2 MODIFICATION OF ANALOG CRATE POWER SUPPLY AND CABLE HARNESS 2

3 MI-BPM-TB SUBRACK – OLD POWER SUPPLY AND HARNESS WIRING 3

Figure 3.1, MI-BPM-TB Subrack old Power Supply and harness wiring before modifications 3
Figure 3.2, Power Supply Harness and backplanes before modifications 4

4 MI-BPM-TB SUBRACK – NEW POWER SUPPLY AND HARNESS WIRING 5

Figure 4.1, MI-BPM-TB Subrack Power Supply and harness wiring after modifications 5
Figure 4.2, New Power Supply Harness and backplanes after modifications 6
Figure 4.3, Power Supply header strip after ECO #1 is applied 7

5 REFERENCES 7

1 Introduction

This document briefly specifies the modifications to be applied to the power supply (ECO 1) and the power harness used for the Main Injector Beam Position Monitor Transition-Board Control Module (MI-BPM-TB-CTL) subarck. The MI-BPM-TB-CTL is part of the electronics of the Main Injector at Fermilab. More information on the experiments performed at Fermilab is available on the laboratory web page:

http://www.fnal.gov/

Documents describing the Main Injector Upgrade project are available in the Fermilab Accelerator Division Document Databases web page:

http://beamdocs.fnal.gov/

Documents describing the MI-BPM-TB-CTL module are available on the web page:

http://www-ese.fnal.gov/MI_BPM_TB_CTL/

2 Modification of Analog Crate power supply and Cable Harness

1) Cable Harness modification allows providing power to the Transition Boards only through the VME backplane.
   Time required to apply the modification to one Cable Harness: 15 minutes.

2) Power Supply does not currently provide over voltage protection if sense leads are disconnected (output voltage exceed 14 Volts). With this modification the power supply should never exceed the spec voltage (5 Volt) even in when the sense leads are disconnected.
   Time required to apply the modification to one Supply: 15 minutes.
   ESS [1] assigned ECO #1 to this modification of the MI BPM TB power supply .

Figure 3.1 and Figure 3.2 show MI-BPM-TB Subrack Power Supply and harness wiring BEFORE modifications.
Figure 4.1 and Figure 4.2 show MI-BPM-TB Subrack Power Supply and harness wiring AFTER modifications.
Figure 4.3 shows the Power Supply header strip after the ECO is applied.

Suggestion: modify a spare cable harness and replace it when the power supply changes are applied. This should cut the system down-time required to modify the system to 15 minutes.

3 MI-BPM-TB Subrack – old Power Supply and harness wiring

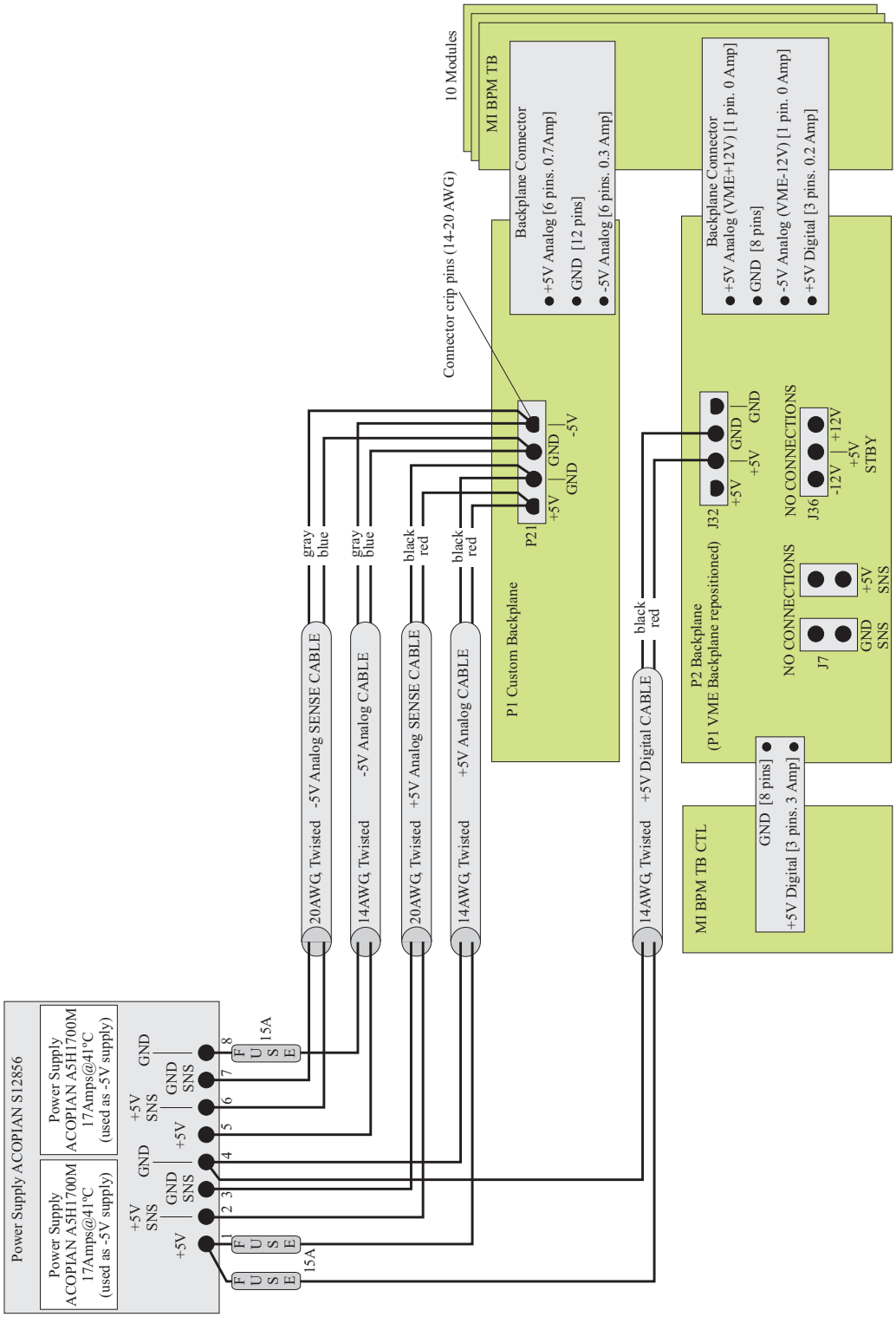

Figure 3.1, MI-BPM-TB Subrack old Power Supply and harness wiring before modifications

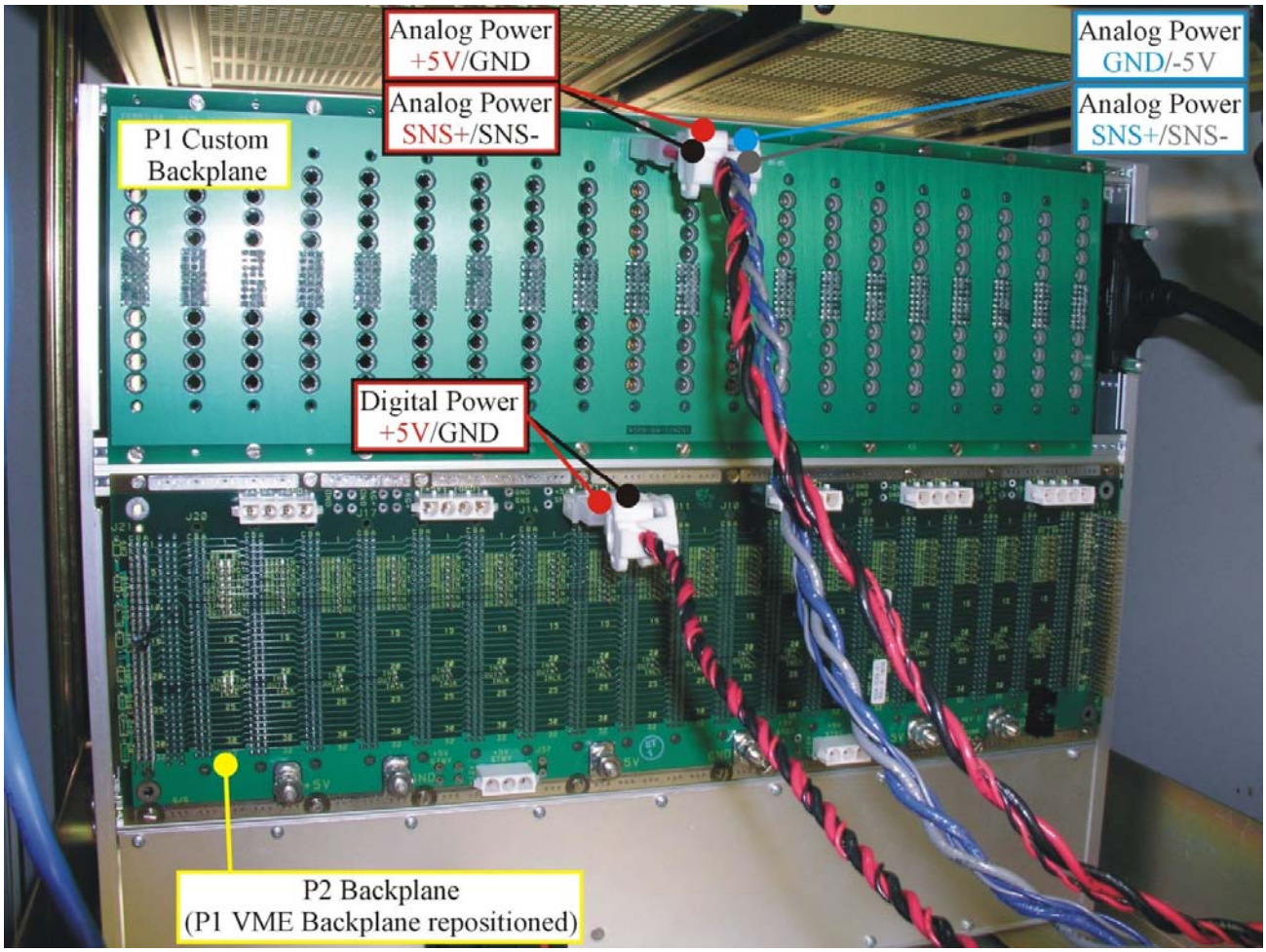

Figure 3.2, Power Supply Harness and backplanes before modifications

4 MI-BPM-TB Subrack – new Power Supply and harness wiring

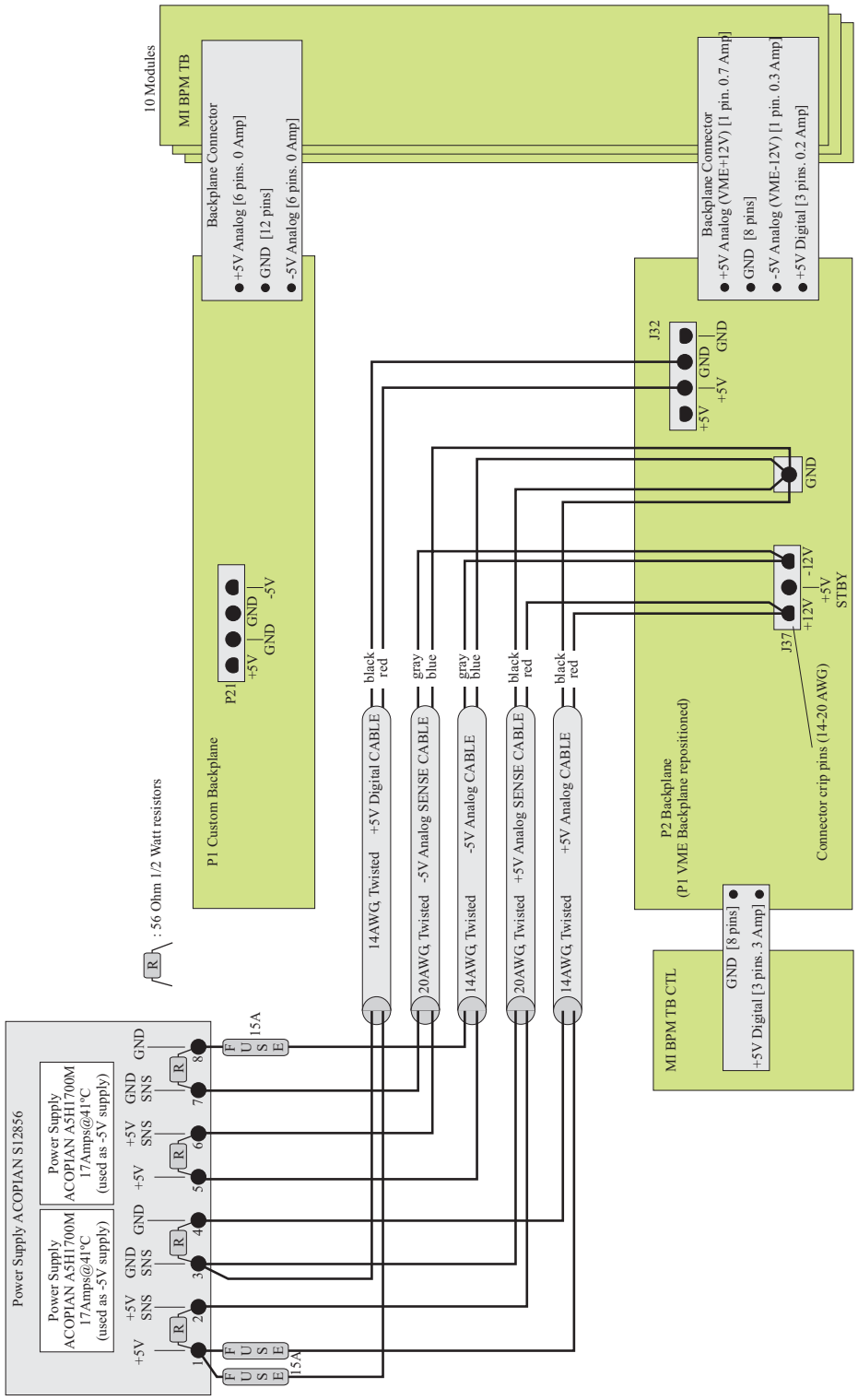

Figure 4.1, MI-BPM-TB Subrack Power Supply and harness wiring after modifications

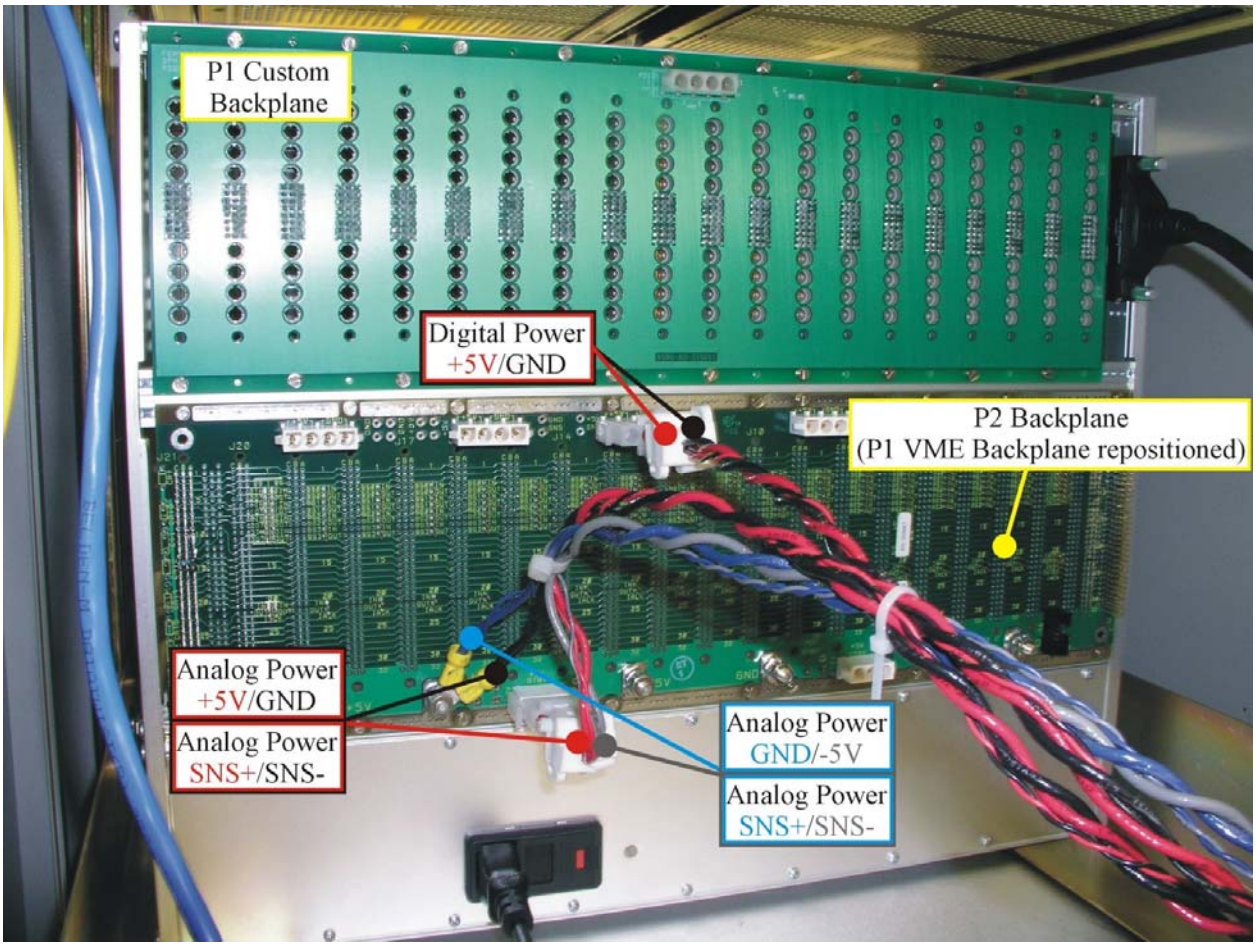

Figure 4.2, New Power Supply Harness and backplanes after modifications

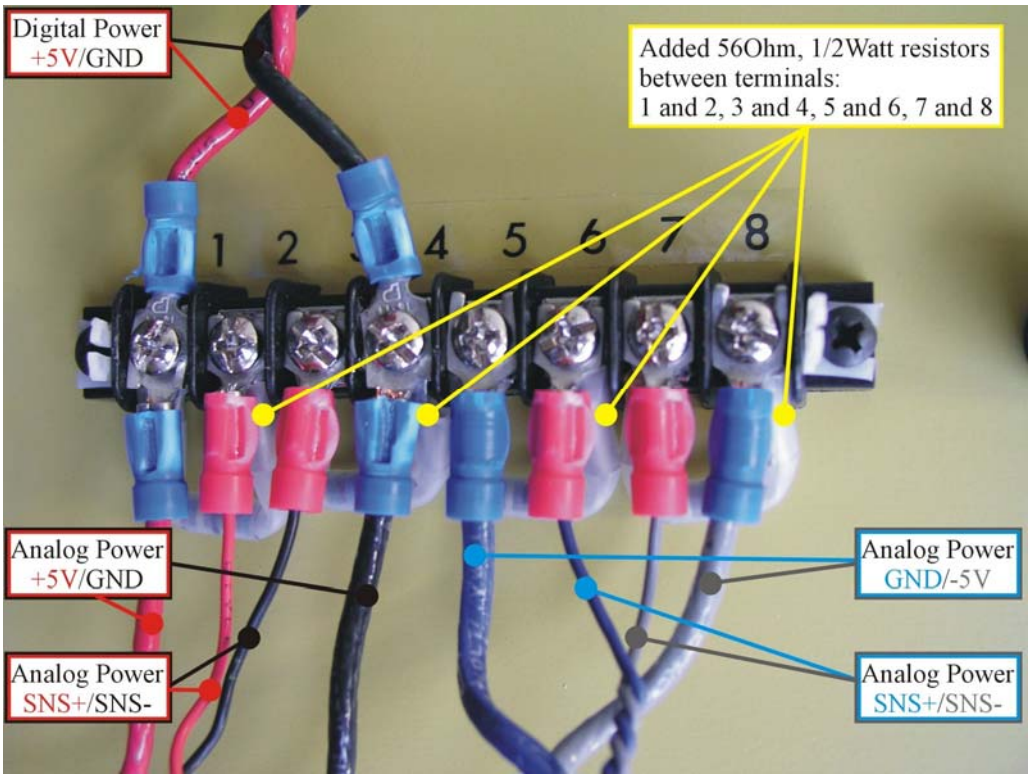

Figure 4.3, Power Supply header strip after ECO #1 is applied

5 References

[1] Fermilab Computing Division (CD), Core Support Services (CSS) Department, Equipment Support Services (ESS) section.
Web site: http://www-esd.fnal.gov/

[2] Acopian power supplies, P.O. Box 638, Easton, PA 18044, USA.
Web site: http://www.acopian.com/