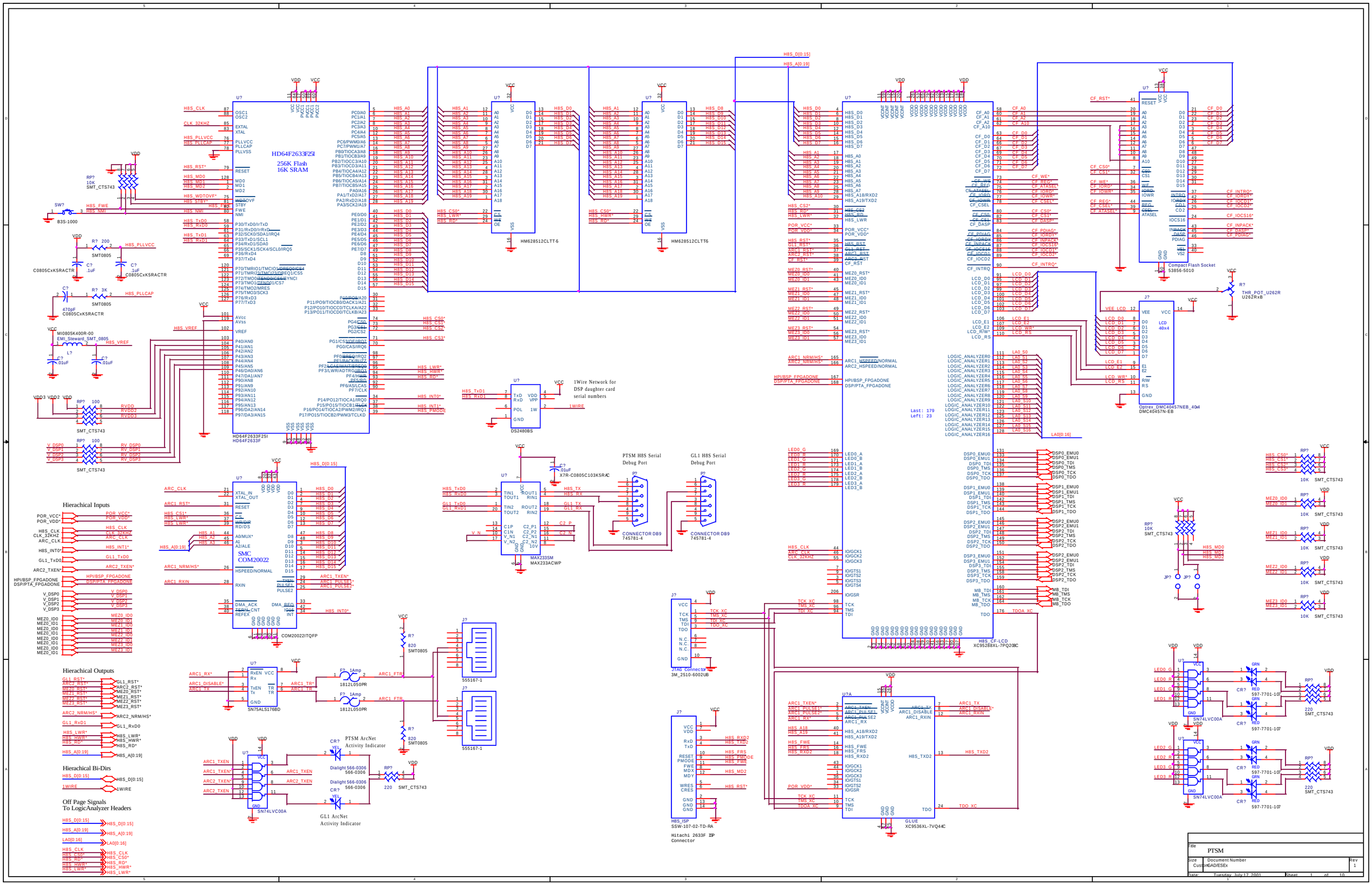
HD64F2633F25I
256K Flash
16K SRAM
HD64F2633F25I
HD64F2633F
HM628512CLTT6
HM628512CLTT6
SMC
COM20022
COM20022ITQFP
Hierachical Inputs
Hierachical Outputs
Hierachical Bi-Dirs
Off Page Signals
To LogicAnalyzer Headers
1Wire Network for
DSP daughter card
serial numbers
DS2480BS
PTSM H8S Serial
Debug Port
GL1 H8S Serial
Debug Port
CONNECTOR DB9
745781-4
MAX233SM
MAX233ACWP
Compact Flash Socket
53856-5010
Optrex_DMC40457NEB_40x4
DMC40457N-EB
HBS_CF-LCD
XC95288XL-7PQ208C
JTAG Connector
3M_2510-6002UB
Hitachi 2633F ISP
Connector
HBS_ISP
SSW-107-02-TD-RA
GLUE
XC9536XL-7VQ44C
SN74LVC00A
SN75ALS176BD
PTSM ArcNet
Activity Indicator
GL1 ArcNet
Activity Indicator
Last: 179
Left: 23
Title
PTSM
Size
Custom
Document Number
GAD/ESEx
Rev
1
Date:
Tuesday, July 17, 2001
Sheet 1 of 10

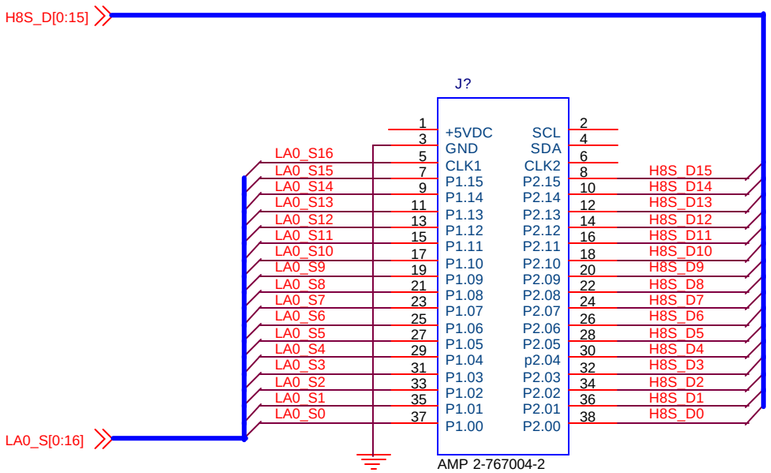

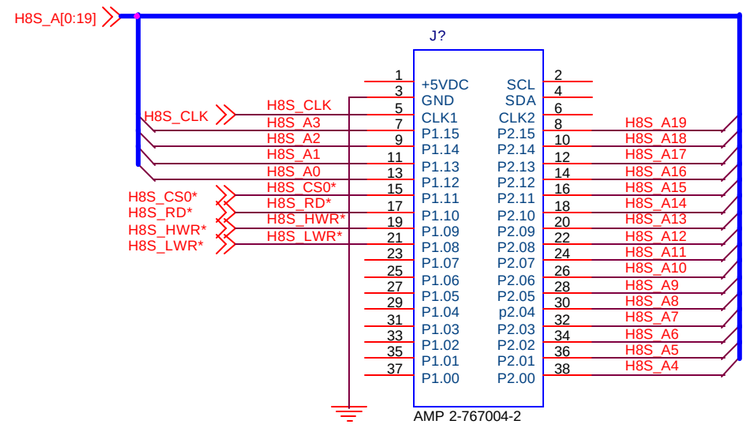

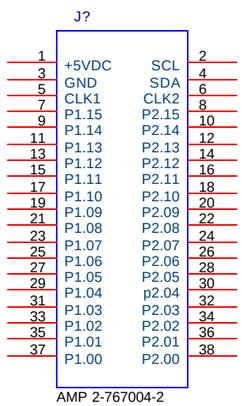

Title	PTSM, Logic Analyzer Headers	
Size B	Document Number GAD/ESEx	Rev 1
Date: Tuesday, July 17, 2001	Sheet 2 of 10	

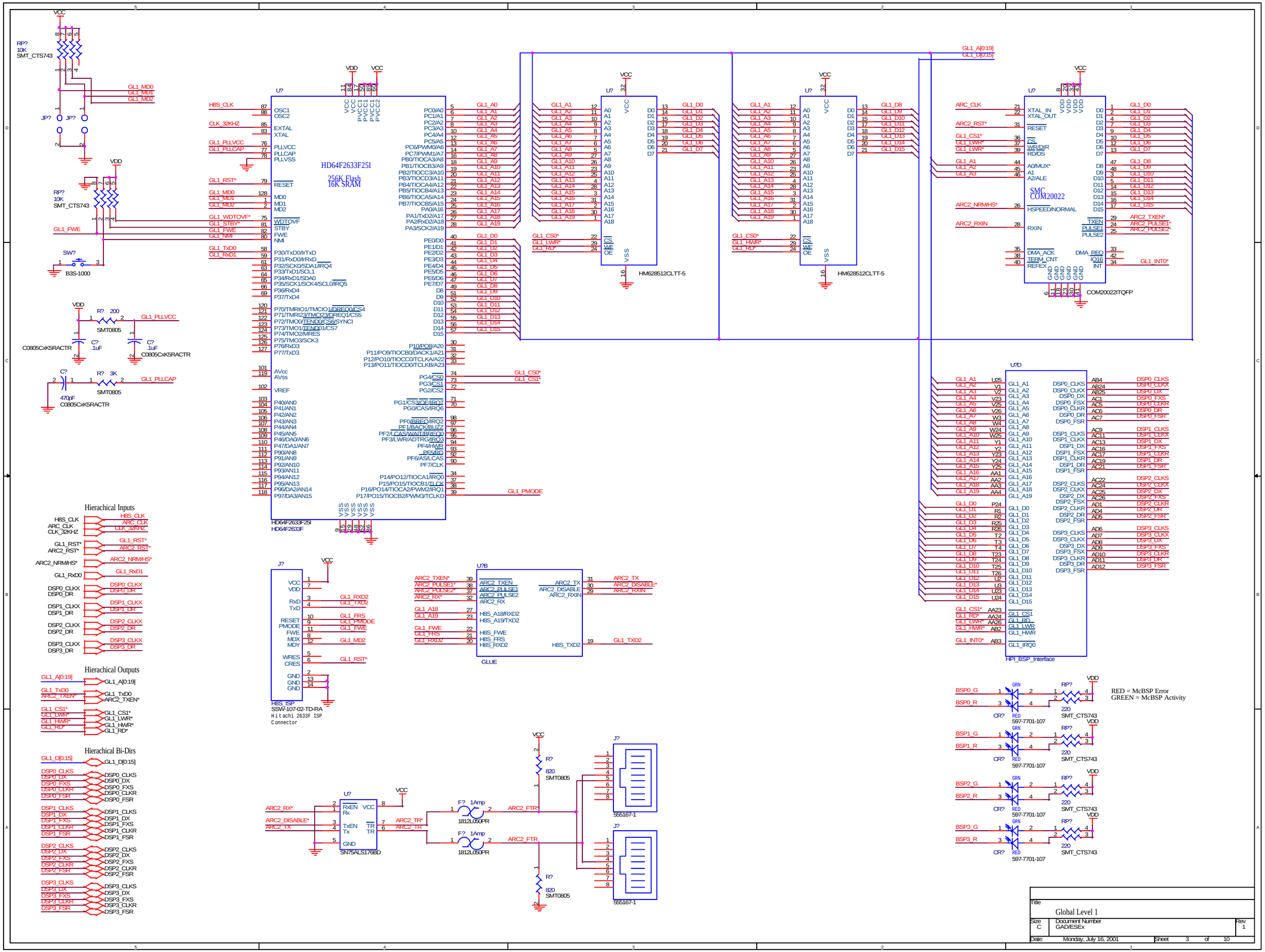
HD64F2633F25I
256K Flash
16K SRAM
HD64F2633F25I
HD64F2633F
HM628512CLTT-5
SMC
COM20022
COM20022ITQFP
HPI_BSP_Interface
GLUE
H8S_ISP
SSW-107-02-TD-RA
Hitachi 2633F ISP
Connector
SN75ALS176BD
555167-1
597-7701-107
SMT0805
SMT_CTS743
B3S-1000
C0805CxK5RACTR
Hierachical Inputs
Hierachical Outputs
Hierachical Bi-Dirs
RED = McBSP Error
GREEN = McBSP Activity
Title
Global Level 1
Size C
Document Number GAD/ESEx
Rev 1
Date: Monday, July 16, 2001
Sheet 3 of 10

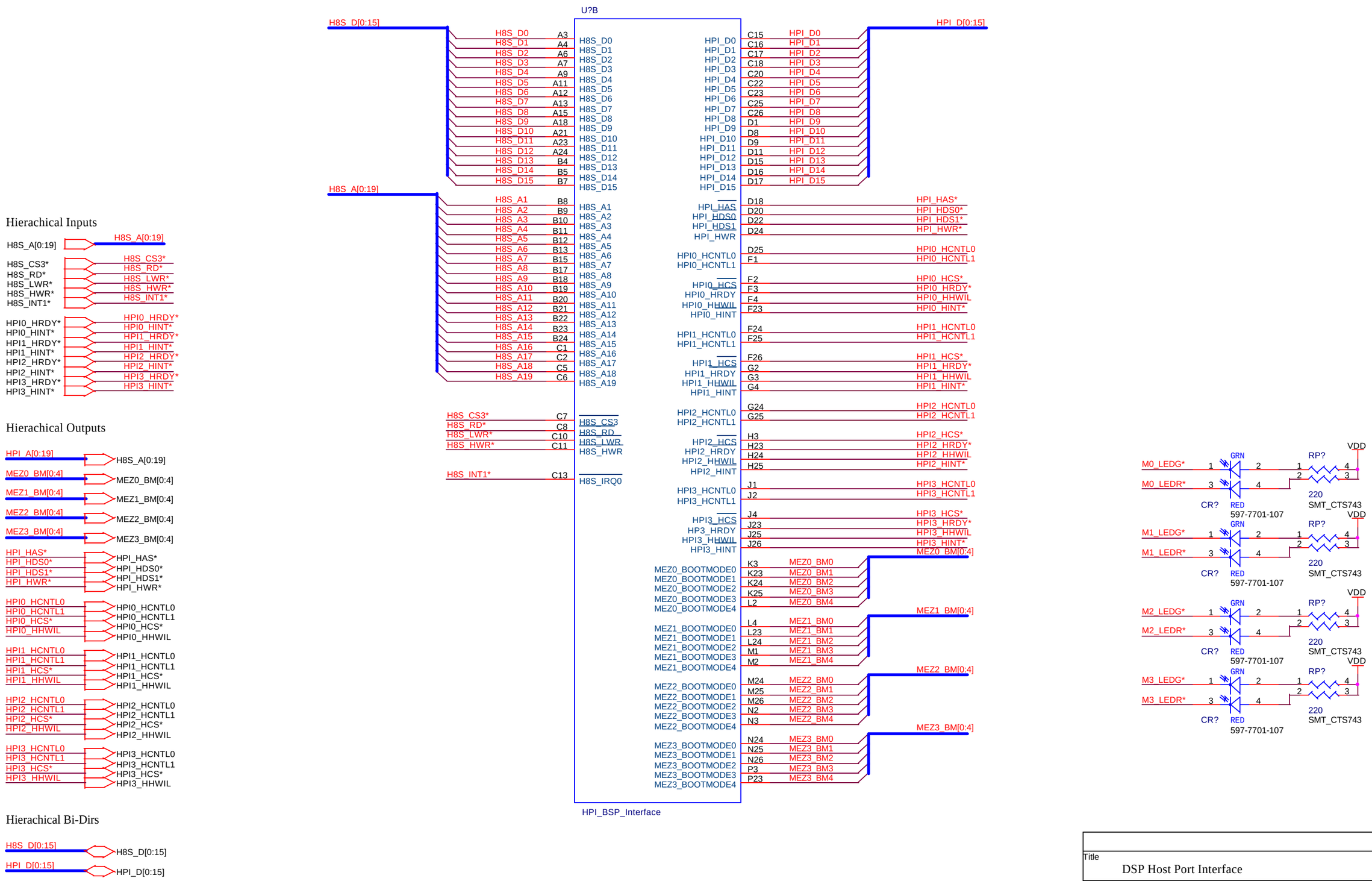

Title
DSP Host Port Interface

Size	Document Number	Rev
B	GAD/ESEx	1

Date: Tuesday, July 17, 2001 Sheet 4 of 10

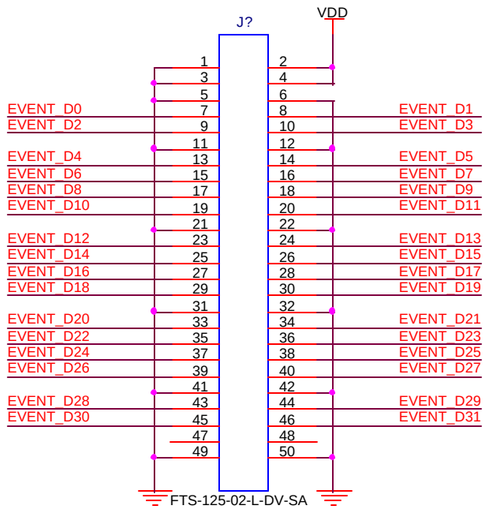

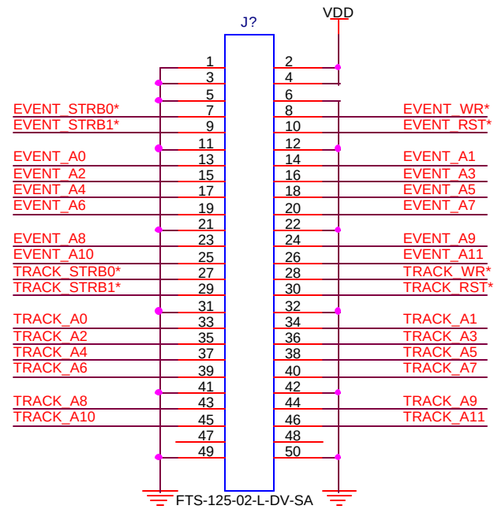

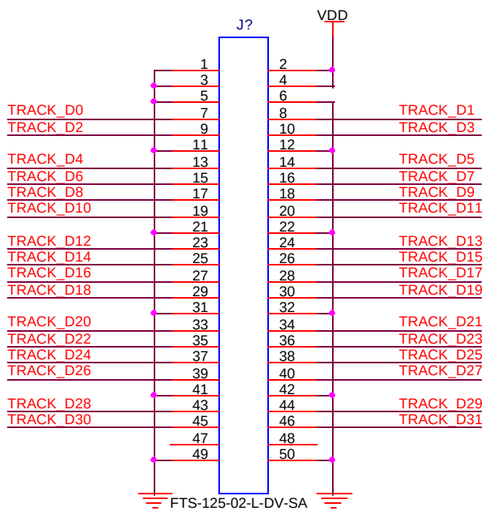

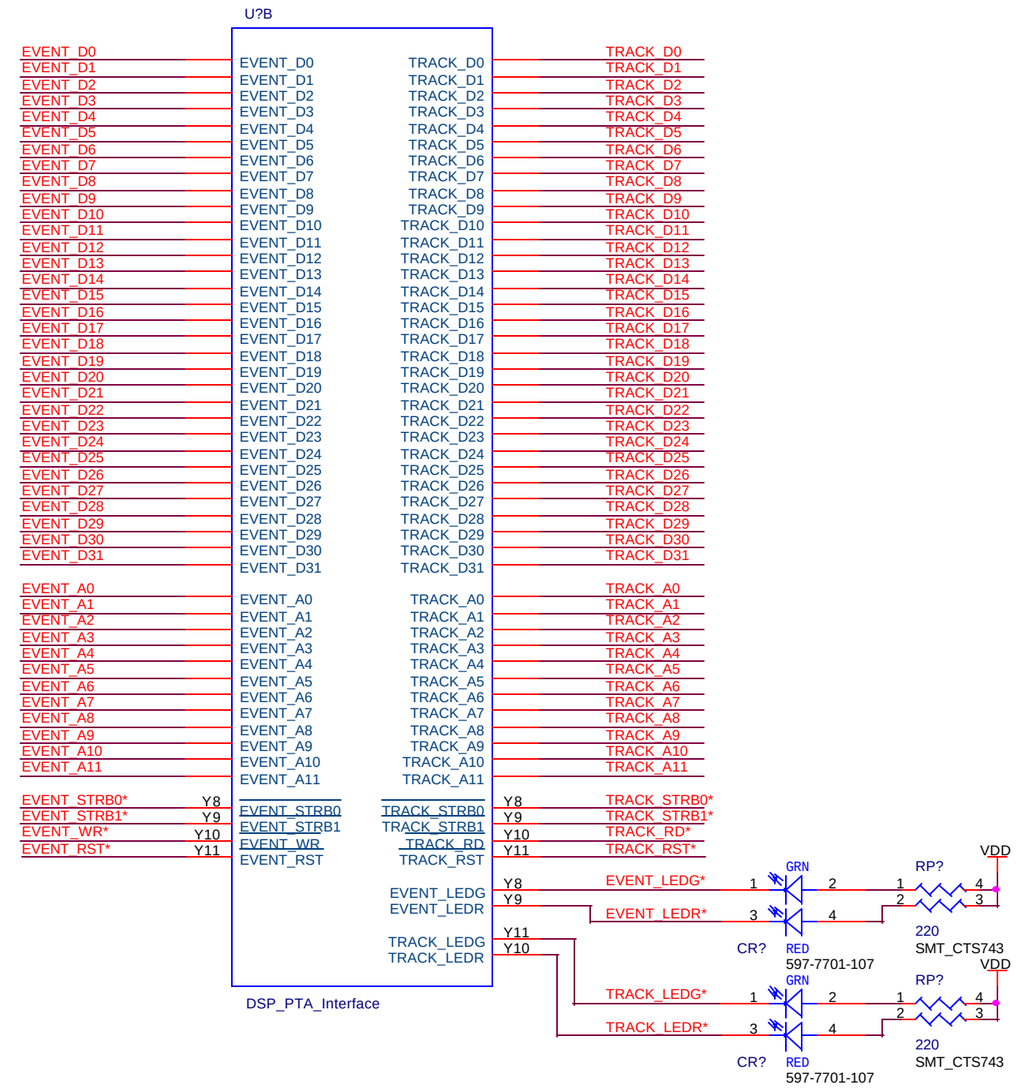

Title	PTA Interface		
Size B	Document Number GAD/ESEx		Rev 1
Date: Tuesday, July 17, 2001		Sheet 5 of 10	

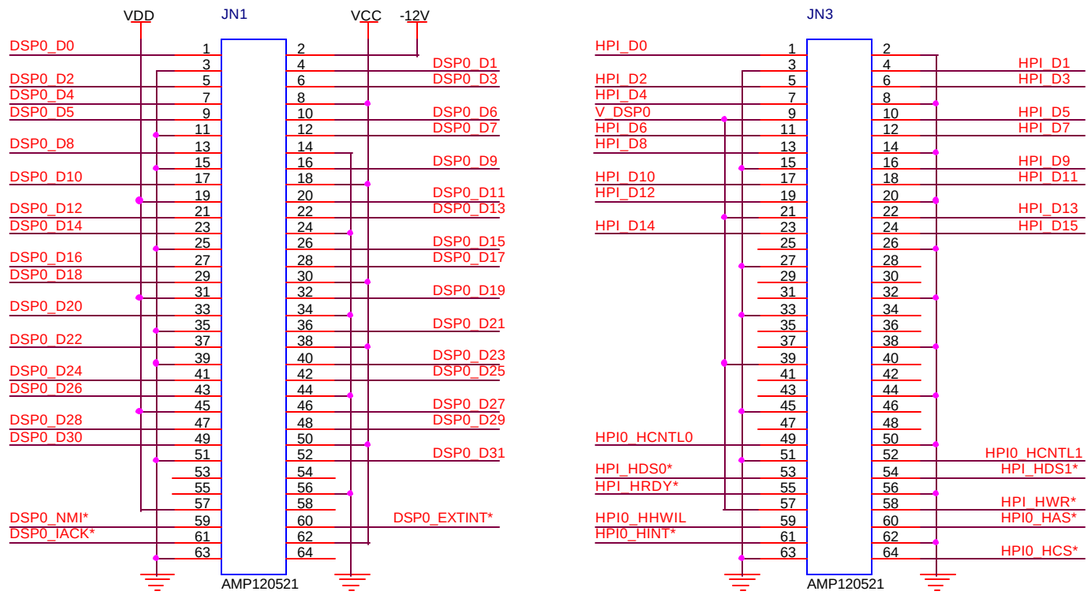

Title	DSP0 Mezzanine Connector		
Size B	Document Number GAD/ESEx		Rev 1
Date: Tuesday, July 17, 2001		Sheet 6 of 10	

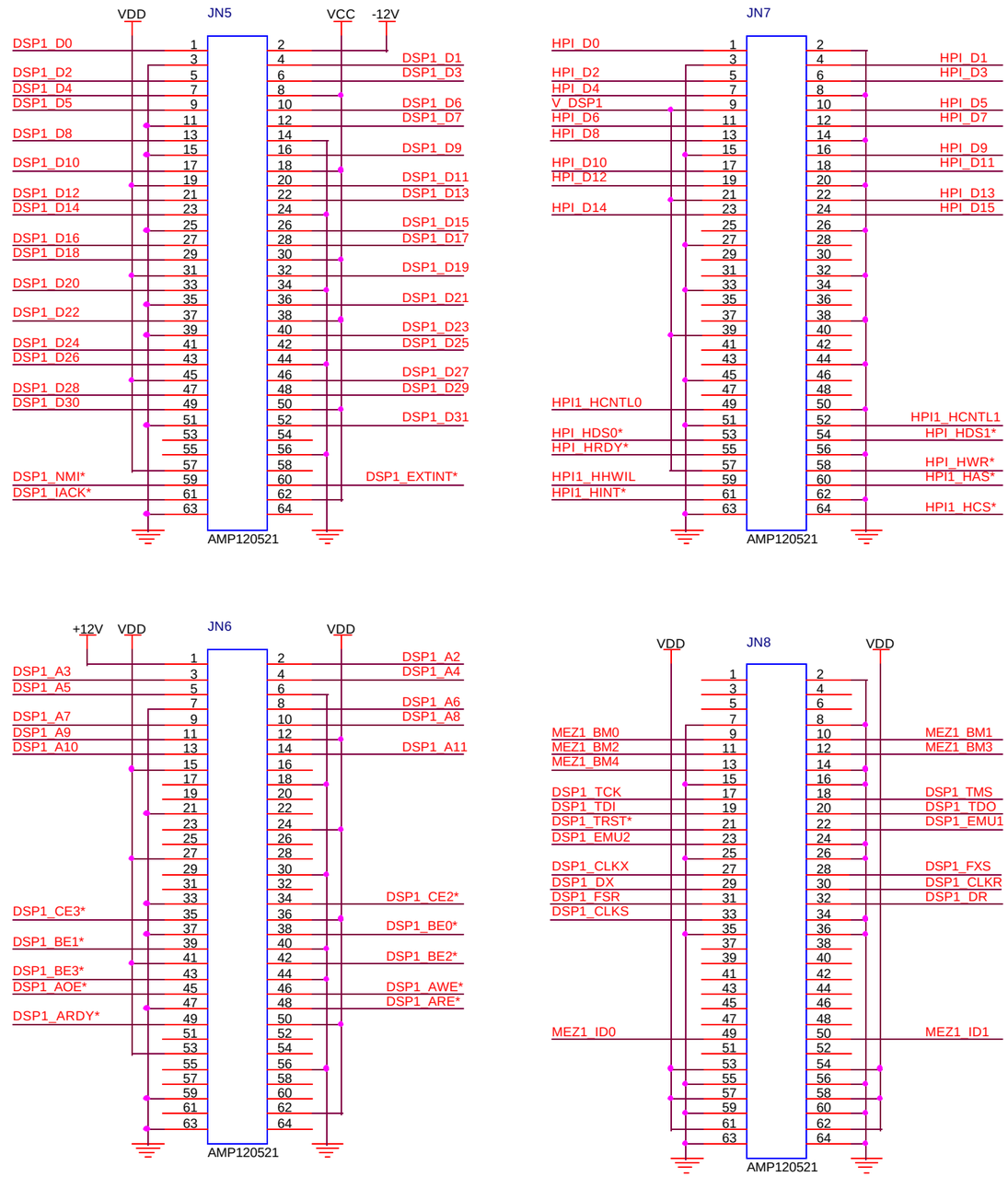

Title
DSP1 Mezzanine Connector

Size	Document Number	Rev
B	GAD/ESEx	1

Date: Tuesday, July 17, 2001 Sheet 7 of 10

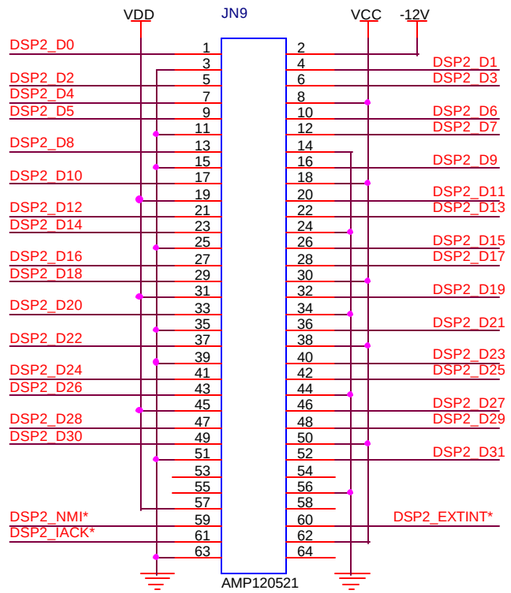

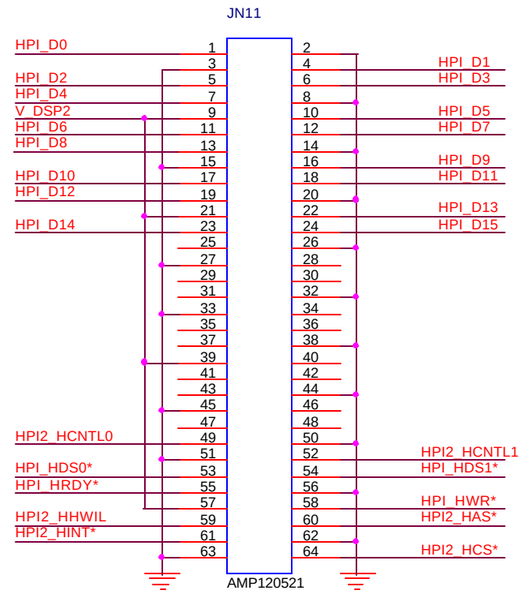

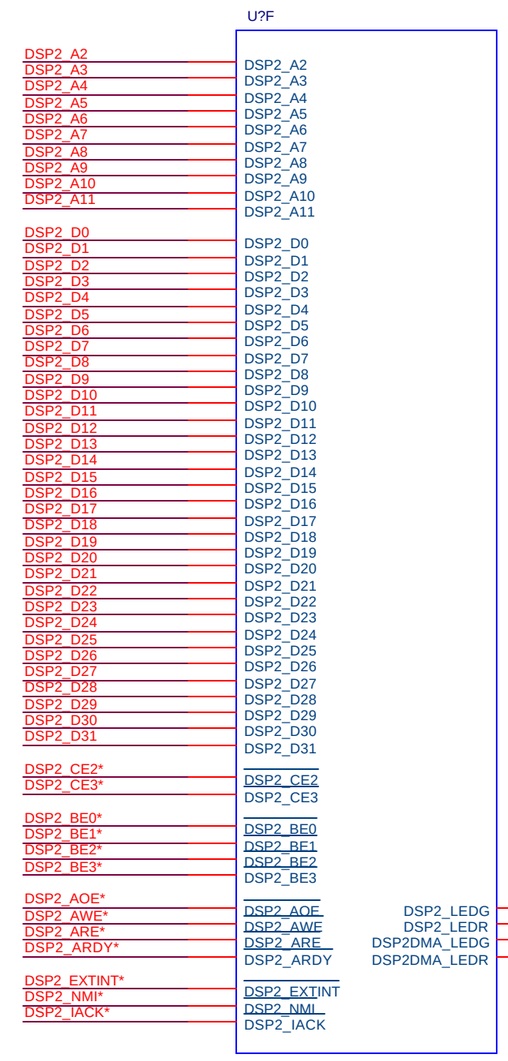

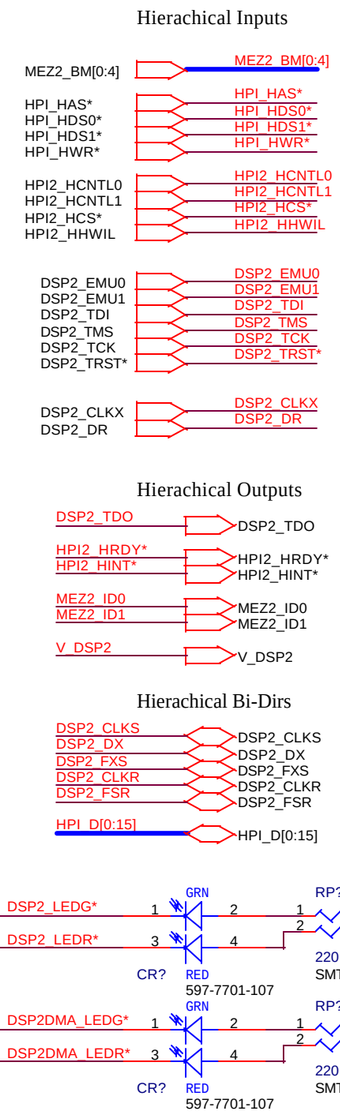

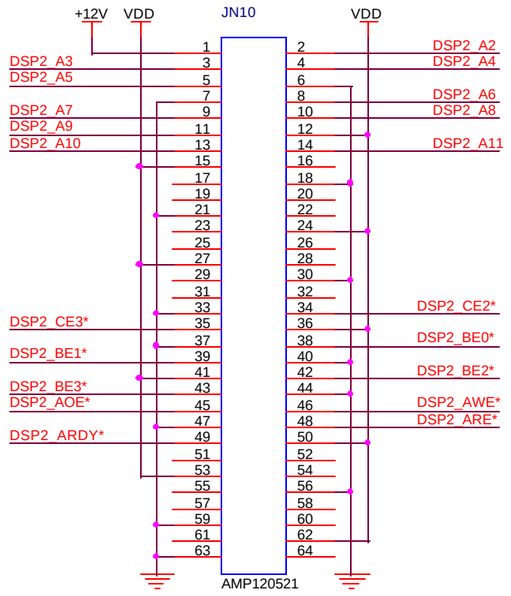

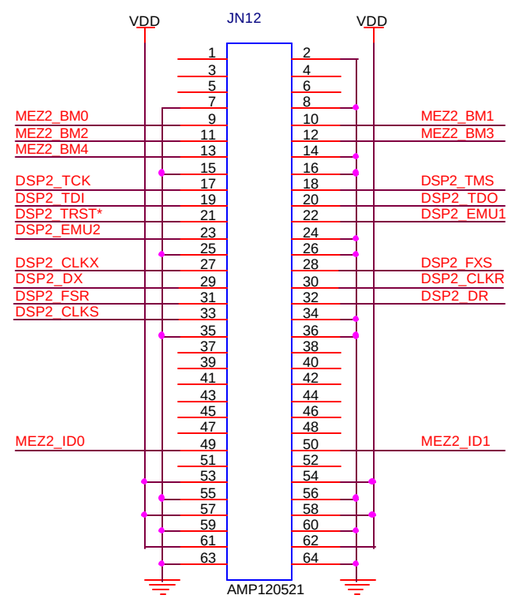

Title	DSP2 Mezzanine Connector		
Size B	Document Number GAD/ESEx		Rev 1
Date: Tuesday, July 17, 2001		Sheet 8 of 10	

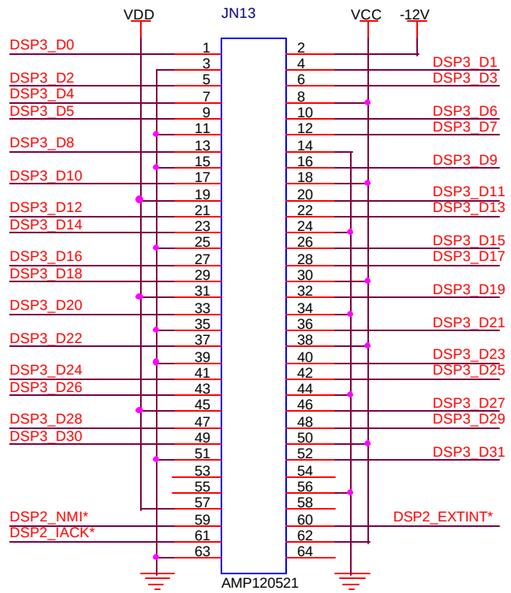

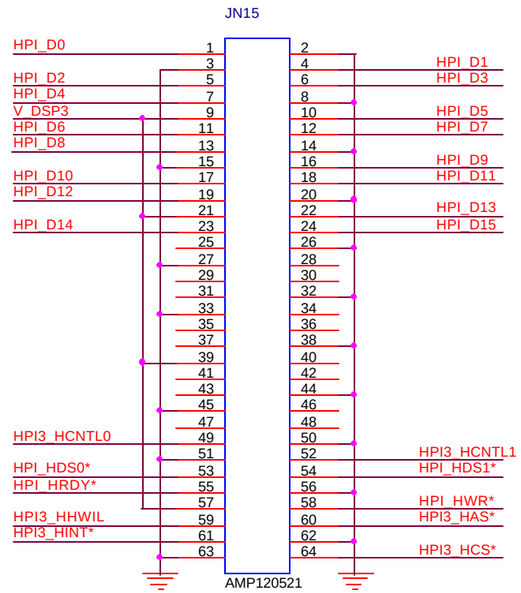

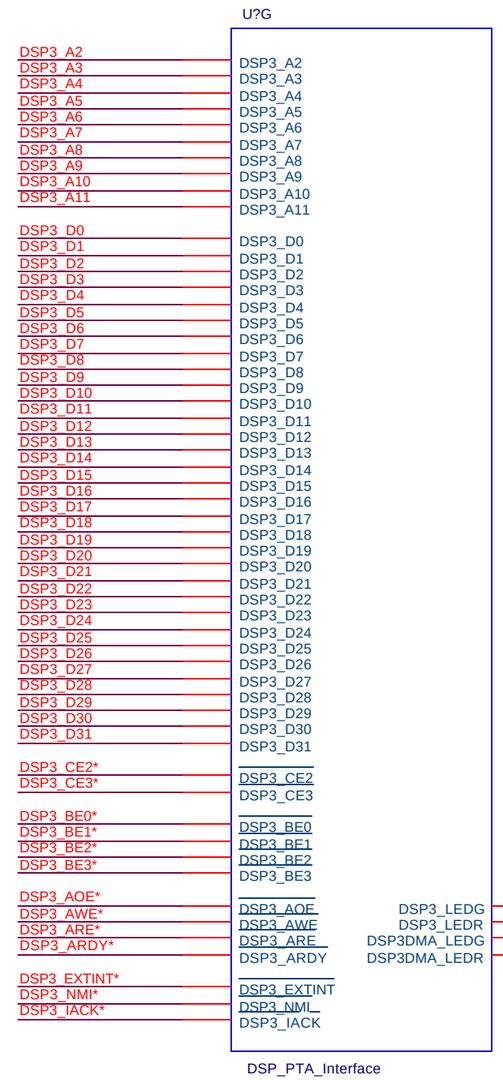

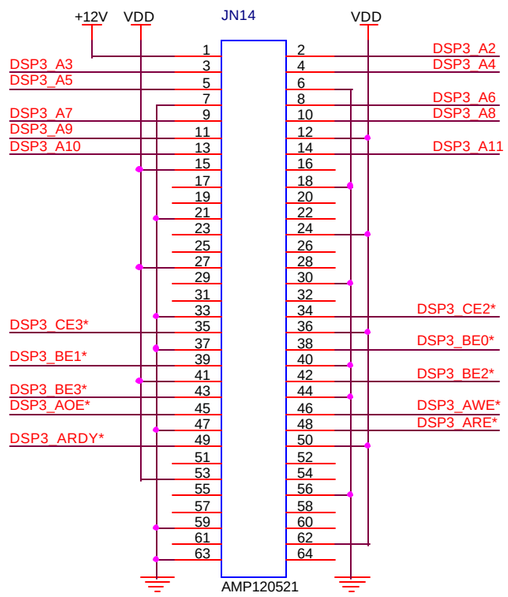

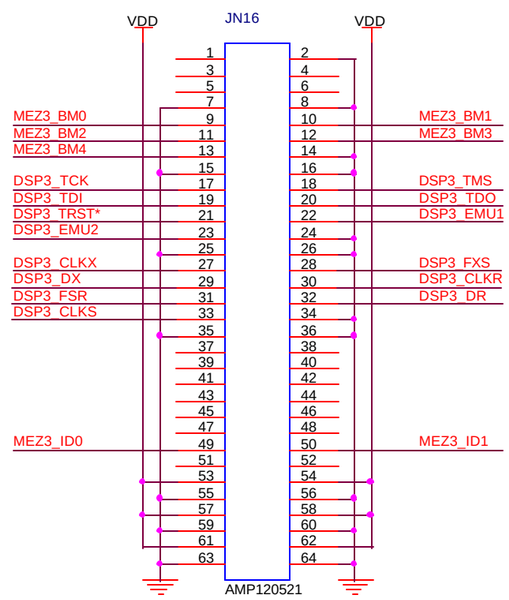

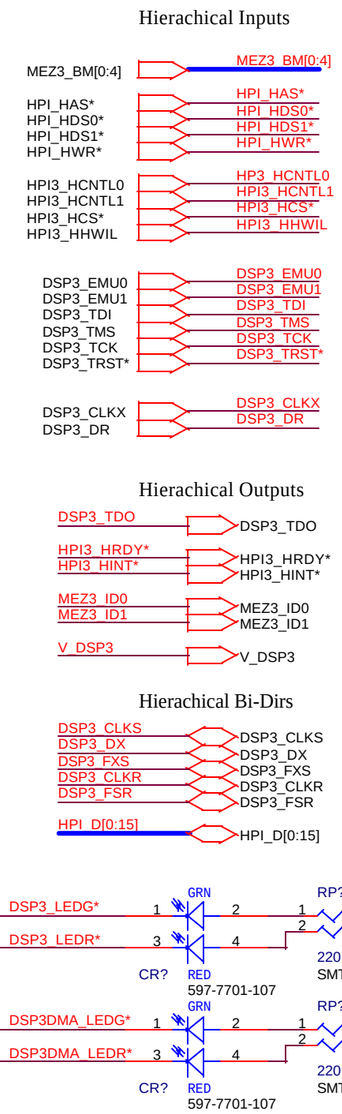

Title	DSP3 Mezzanine Connector		
Size B	Document Number GAD/ESEx		Rev 1
Date: Tuesday, July 17, 2001		Sheet 9 of 10	

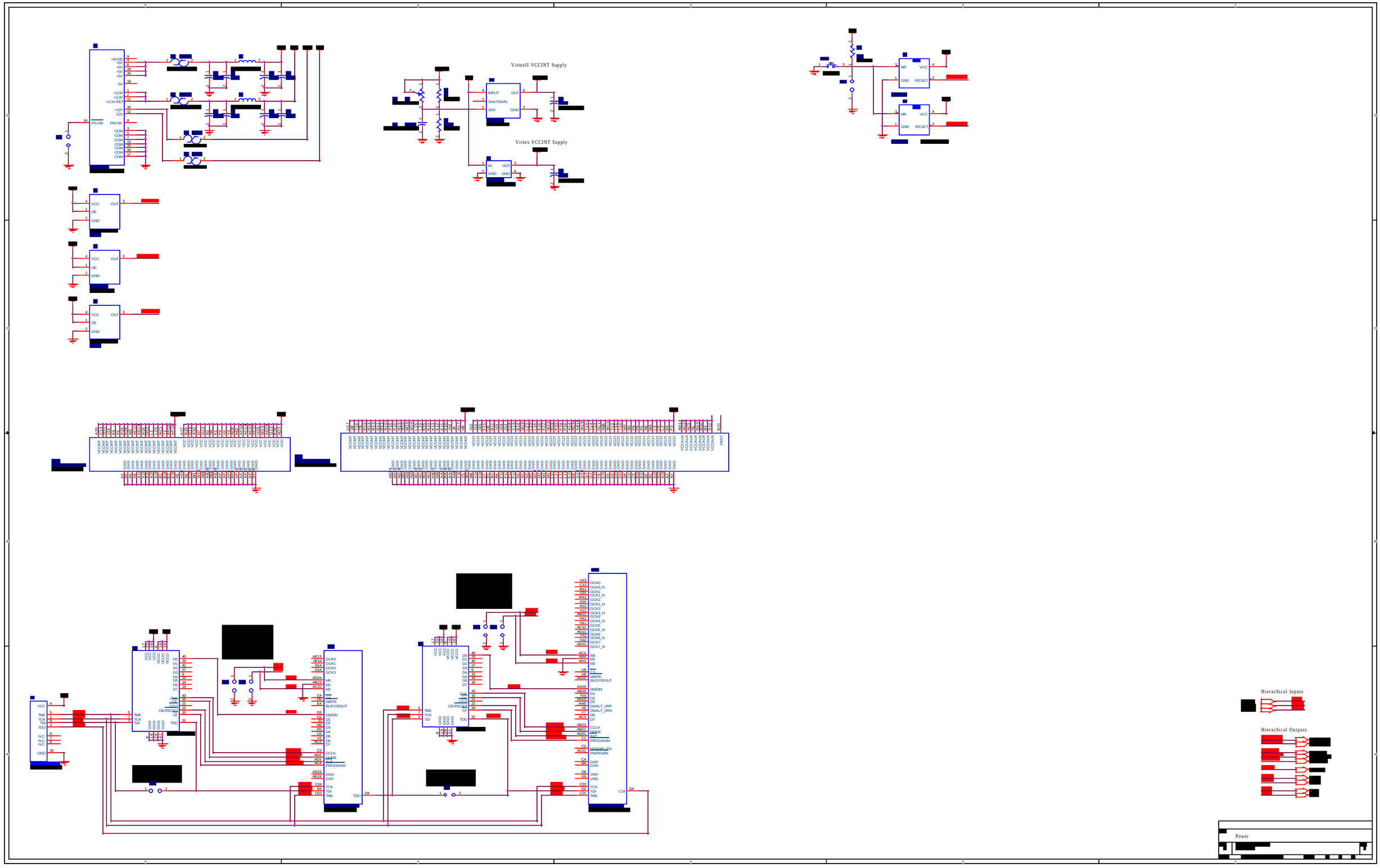
VirtexII VCCINT Supply
Virtex VCCINT Supply
Hierachical Inputs
Hierachical Outputs
Power