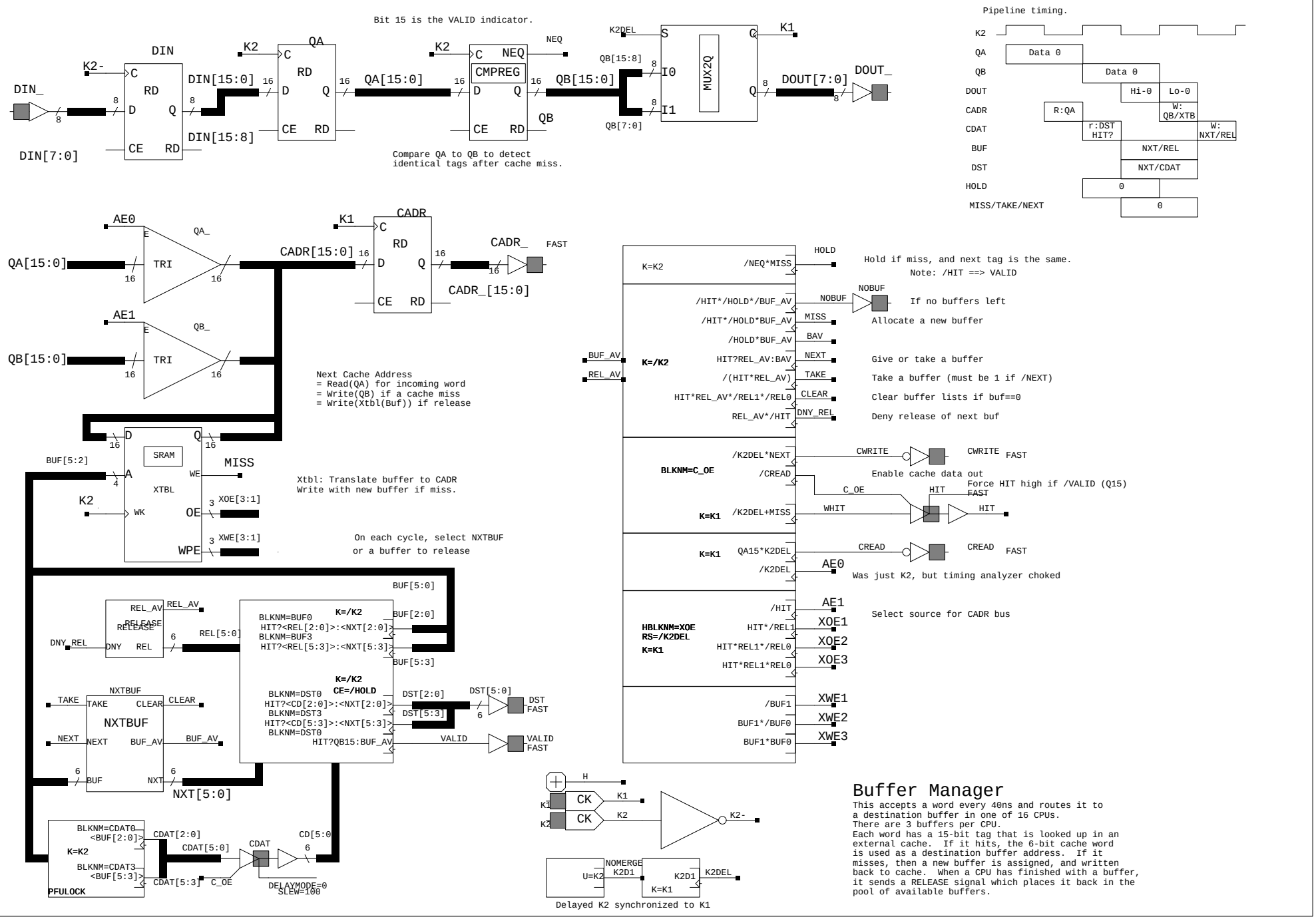

Buffer Manager

This accepts a word every 40ns and routes it to a destination buffer in one of 16 CPUs.
There are 3 buffers per CPU.
Each word has a 15-bit tag that is looked up in an external cache. If it hits, the 6-bit cache word is used as a destination buffer address. If it misses, then a new buffer is assigned, and written back to cache. When a CPU has finished with a buffer, it sends a RELEASE signal which places it back in the pool of available buffers.