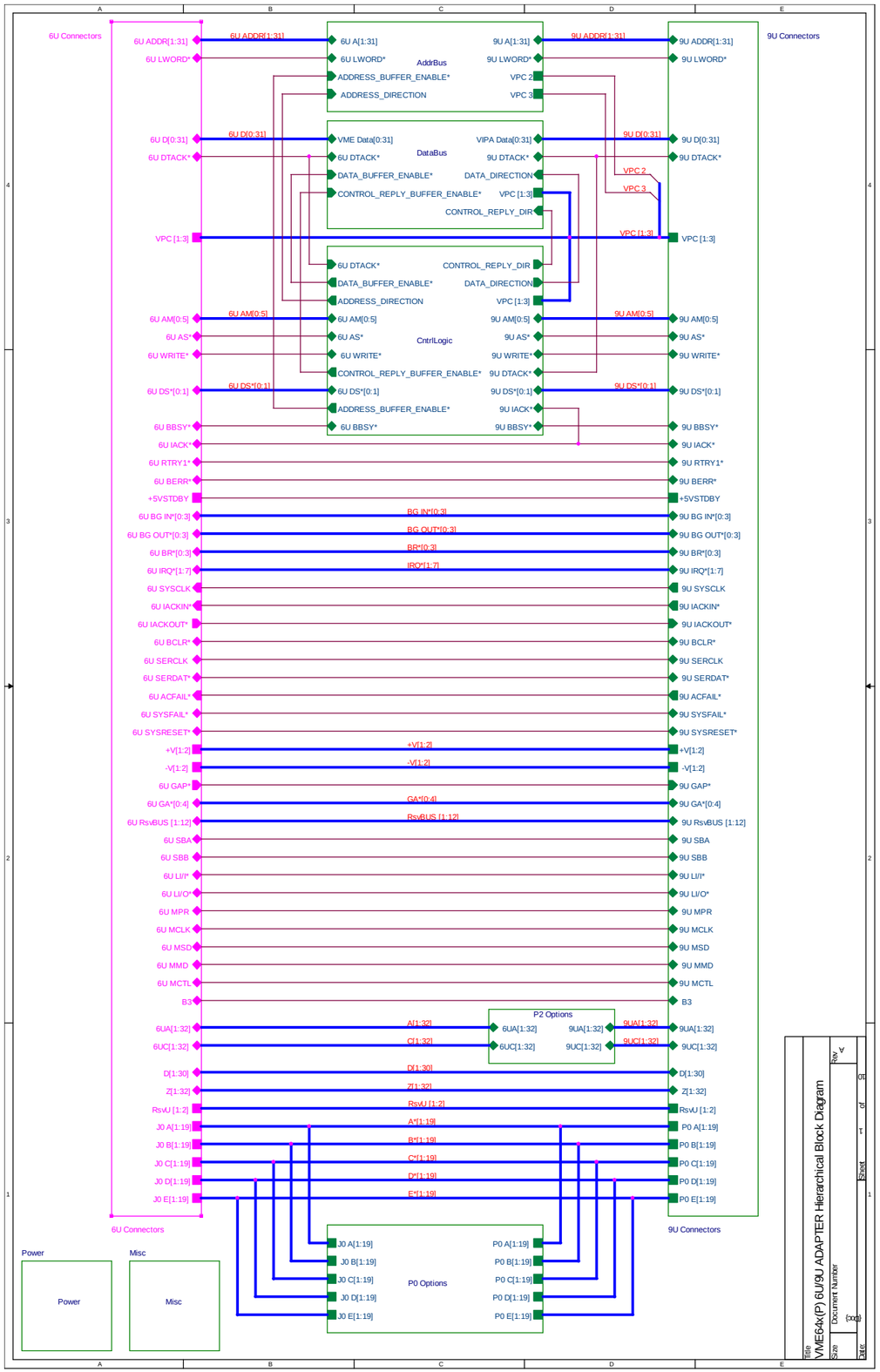
6U Connectors
9U Connectors
AddrBus
6U A[1:31]
6U LWORD*
ADDRESS_BUFFER_ENABLE*
ADDRESS_DIRECTION
9U A[1:31]
9U LWORD*
VPC 2
VPC 3
DataBus
VME Data[0:31]
6U DTACK*
DATA_BUFFER_ENABLE*
CONTROL_REPLY_BUFFER_ENABLE*
VIPA Data[0:31]
9U DTACK*
DATA_DIRECTION
VPC [1:3]
CONTROL_REPLY_DIR
CntrlLogic
6U AM[0:5]
6U AS*
6U WRITE*
6U DS*[0:1]
6U BBSY*
9U AM[0:5]
9U AS*
9U WRITE*
9U DTACK*
9U DS*[0:1]
9U IACK*
9U BBSY*
P2 Options
6UA[1:32]
6UC[1:32]
9UA[1:32]
9UC[1:32]
P0 Options
J0 A[1:19]
J0 B[1:19]
J0 C[1:19]
J0 D[1:19]
J0 E[1:19]
P0 A[1:19]
P0 B[1:19]
P0 C[1:19]
P0 D[1:19]
P0 E[1:19]
Power
Misc
Title
VME64x(P) 6U/9U ADAPTER Hierarchical Block Diagram
Size
Document Number
Rev
A
Date: Wednesday, February 24, 1999
Sheet 1 of 1

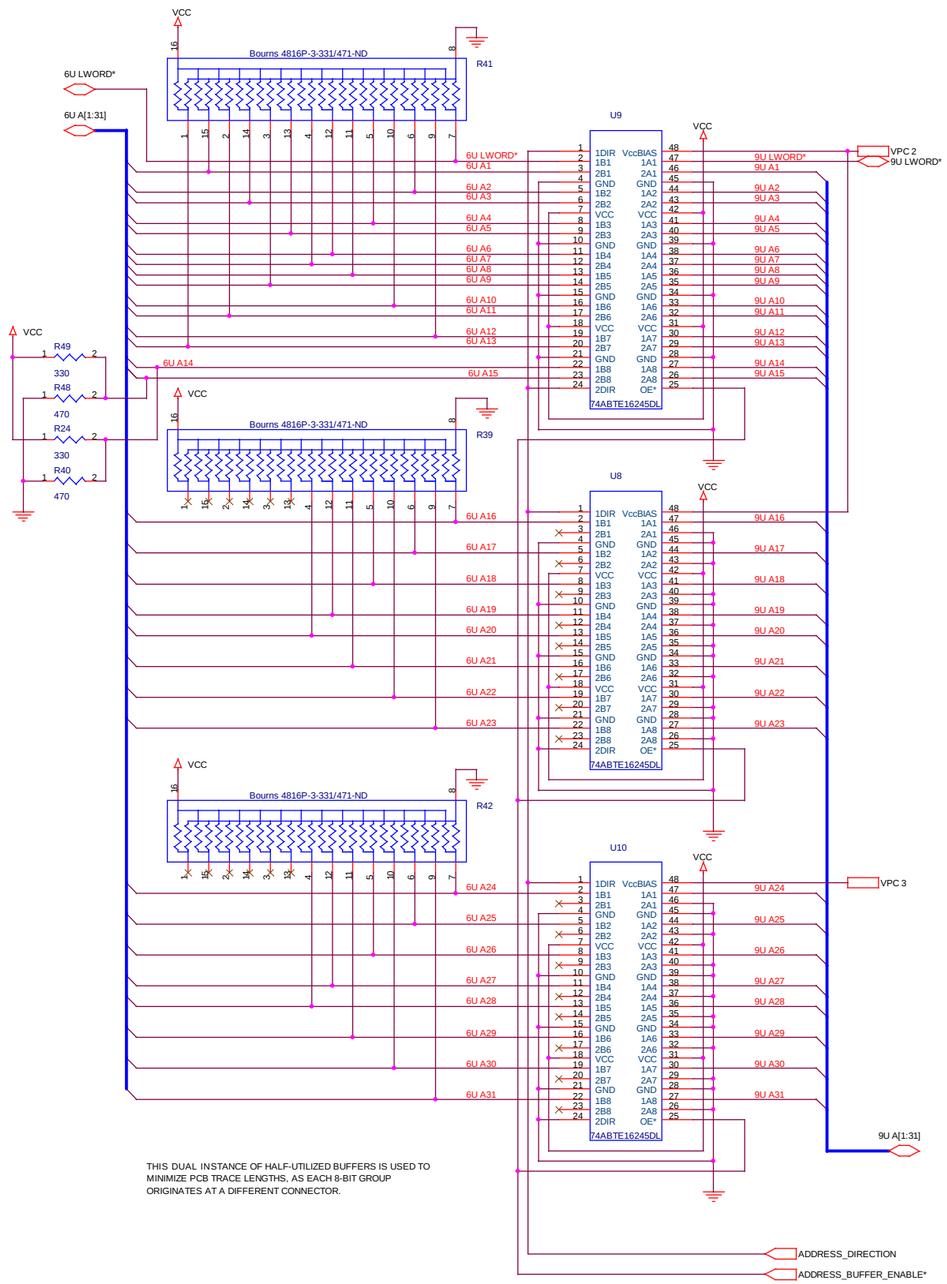

THIS DUAL INSTANCE OF HALF-UTILIZED BUFFERS IS USED TO MINIMIZE PCB TRACE LENGTHS, AS EACH 8-BIT GROUP ORIGINATES AT A DIFFERENT CONNECTOR.

Fermi National Accelarator Lab

Title: VME64x(P) 6U to 9U ADAPTER Address Flow

Size	Document Number	Rev
B	{Doc}	A

Date: Friday, February 19, 1999 Sheet 4 of 10

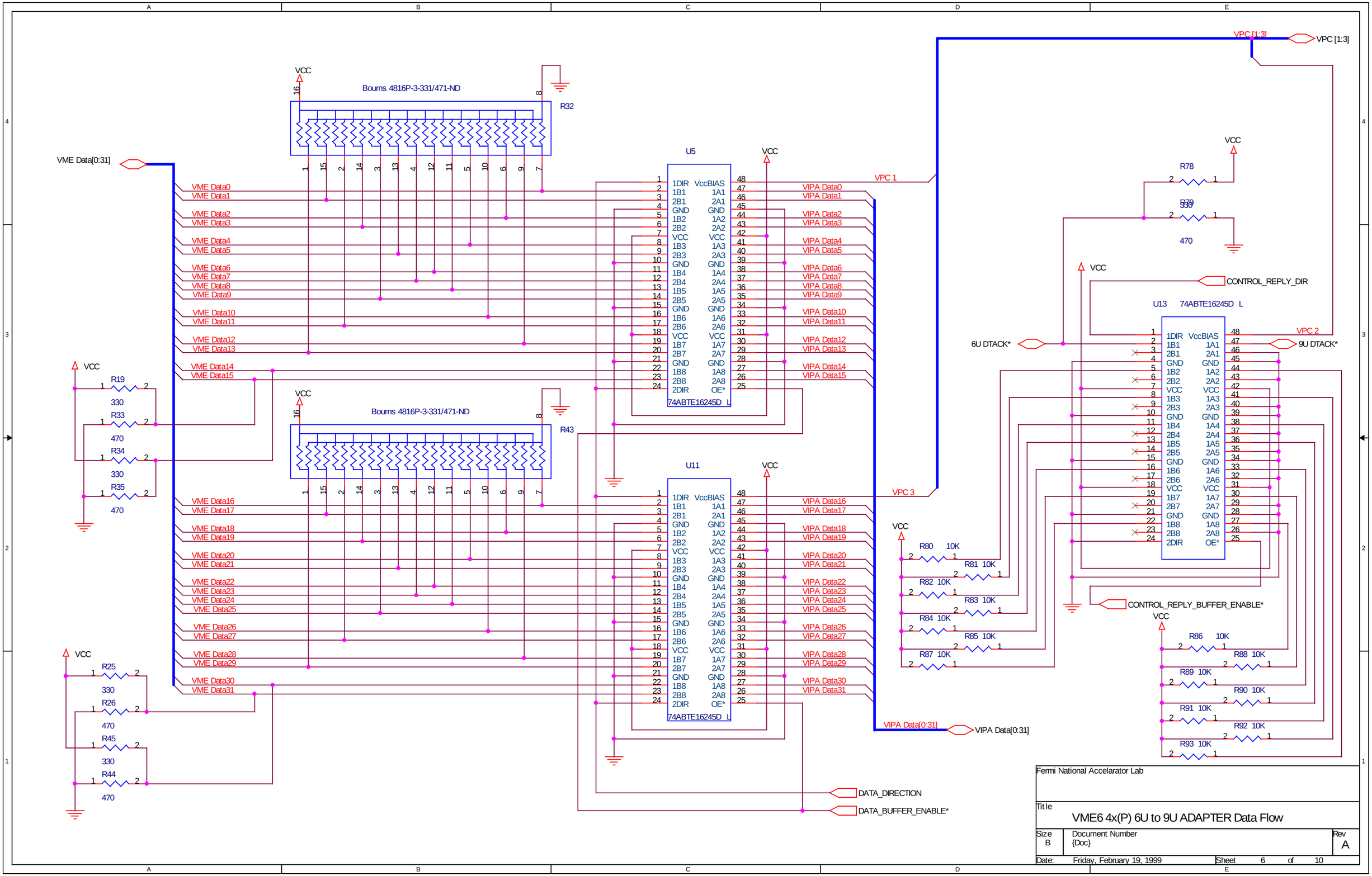

Fermi National Accelarator Lab

Title

VME6 4x(P) 6U to 9U ADAPTER Data Flow

Size	Document Number	Rev
B	{Doc}	A

Date: Friday, February 19, 1999 Sheet 6 of 10

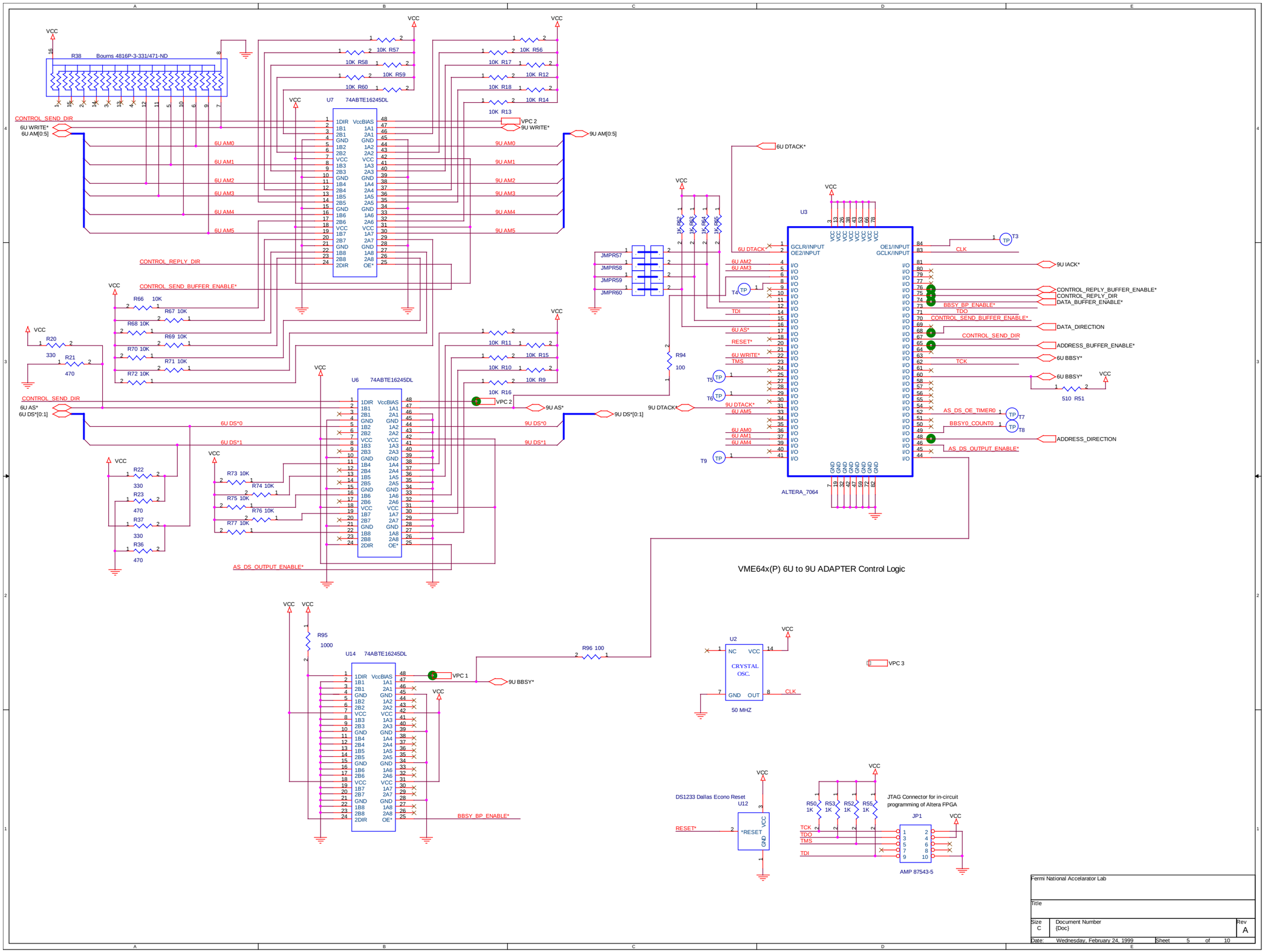
VME64x(P) 6U to 9U ADAPTER Control Logic
R38 Bourns 4816P-3-331/471-ND
U7 74ABTE16245DL
U6 74ABTE16245DL
U14 74ABTE16245DL
U3
ALTERA_7064
U2
CRYSTAL OSC.
50 MHZ
U12
DS1233 Dallas Econo Reset
JP1
AMP 87543-5
JTAG Connector for in-circuit programming of Altera FPGA
CONTROL_SEND_DIR
6U WRITE*
6U AM[0:5]
9U AM[0:5]
9U WRITE*
CONTROL_REPLY_DIR
CONTROL_SEND_BUFFER_ENABLE*
6U AS*
6U DS*[0:1]
9U AS*
9U DS*[0:1]
AS_DS_OUTPUT_ENABLE*
BBSY_BP_ENABLE*
9U BBSY*
6U DTACK*
9U DTACK*
9U IACK*
CLK
CONTROL_REPLY_BUFFER_ENABLE*
DATA_BUFFER_ENABLE*
TDO
DATA_DIRECTION
ADDRESS_BUFFER_ENABLE*
6U BBSY*
TCK
ADDRESS_DIRECTION
AS_DS_OE_TIMER0
BBSY0_COUNT0
AS_DS_OUTPUT_ENABLE*
RESET*
TDI
TMS
VPC 1
VPC 2
VPC 3
Fermi National Accelerator Lab
Title
Size C
Document Number {Doc}
Rev A
Date: Wednesday, February 24, 1999
Sheet 5 of 10

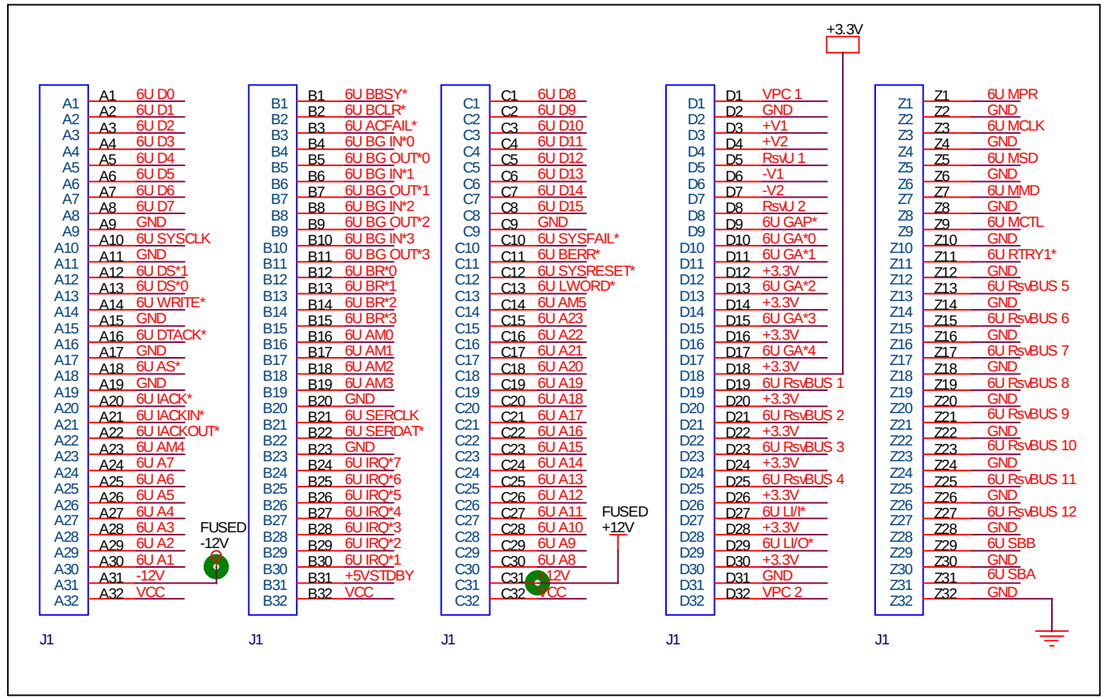

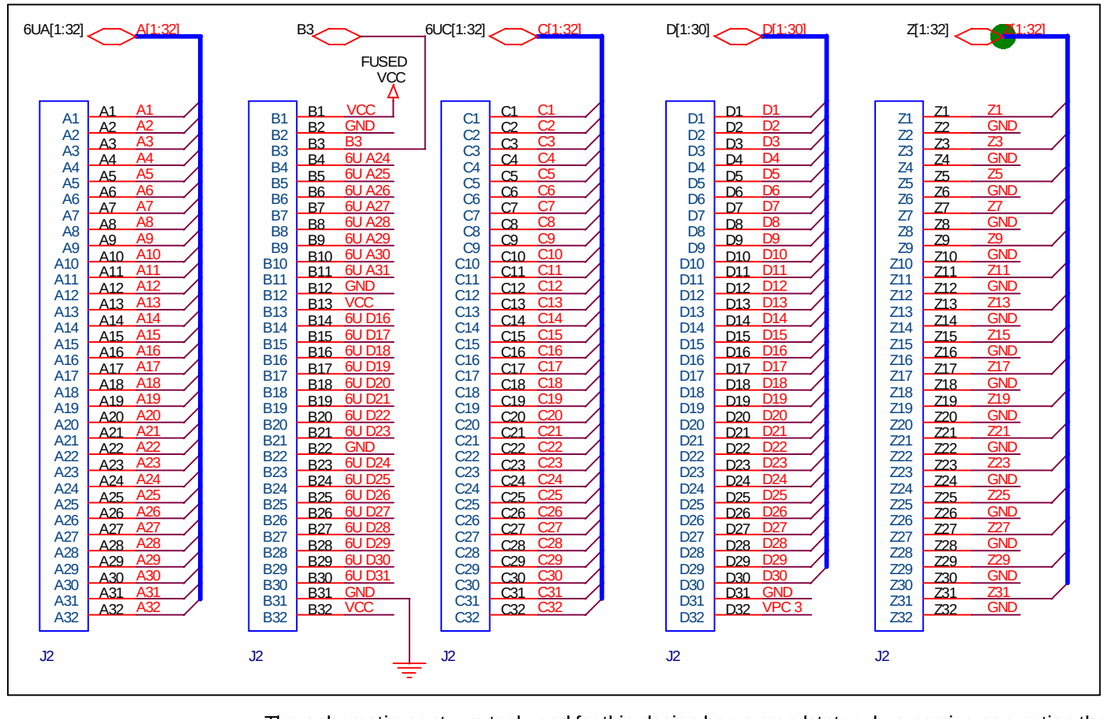

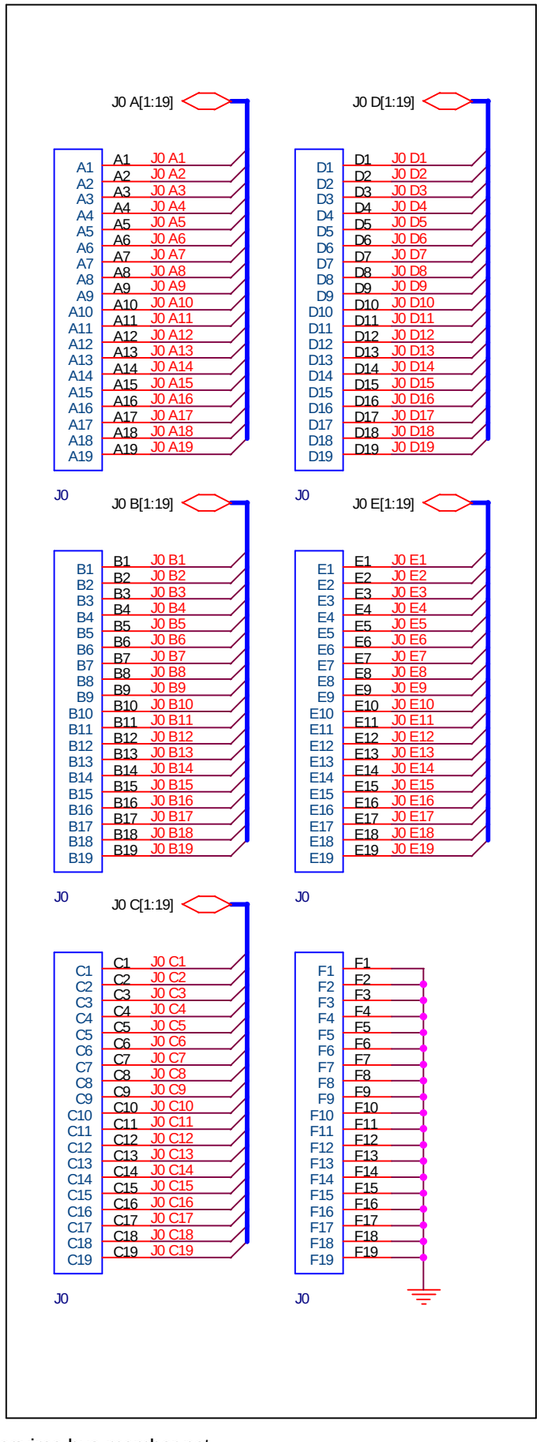

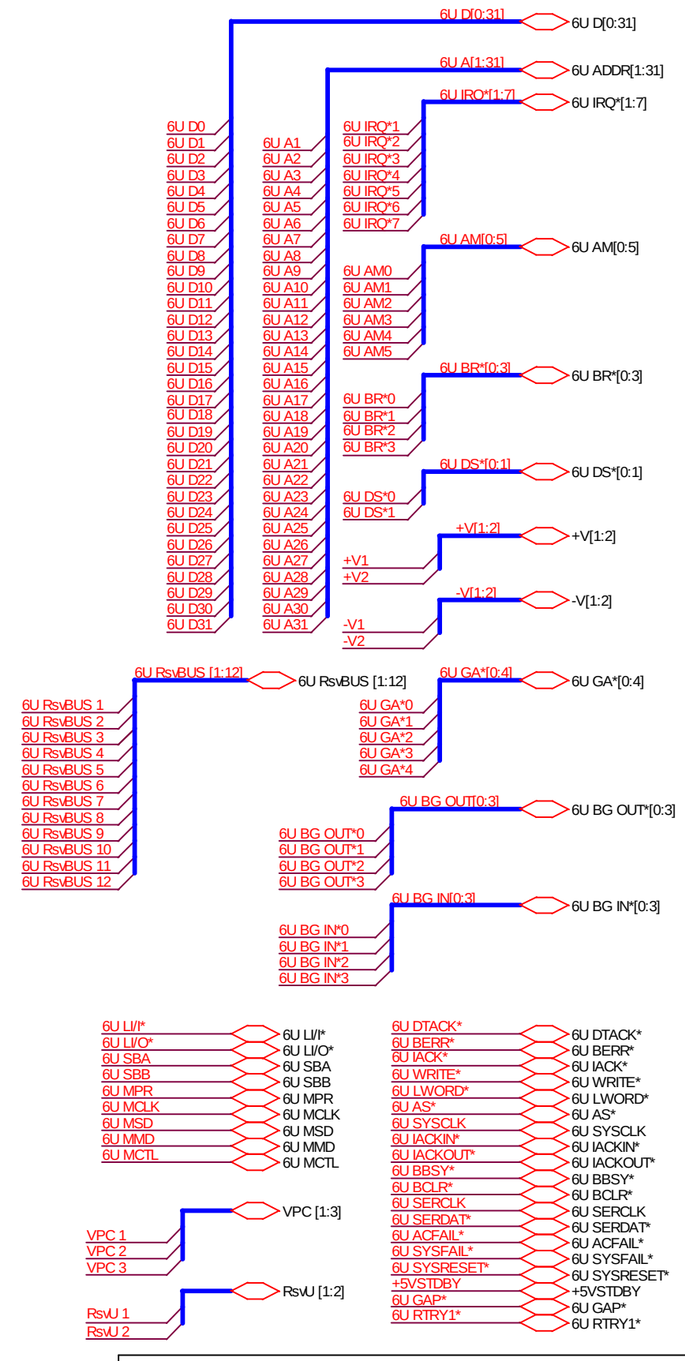

The schematic captu re tool used for this design has a mandatatory bus naming convention that requires bus member net names to end with a numerical digit. Fo r that reason, asterik (*) characters and sometimes text in conventional VME signal names have been repositioned to favor numeric endings.

Title	VME 64x(P) 6U to 9U ADAPTER 6U Connectors	
Size B	Document Number {Doc}	Rev A
Date: Wednesday, February 24, 1999	Sheet 2 of 10	

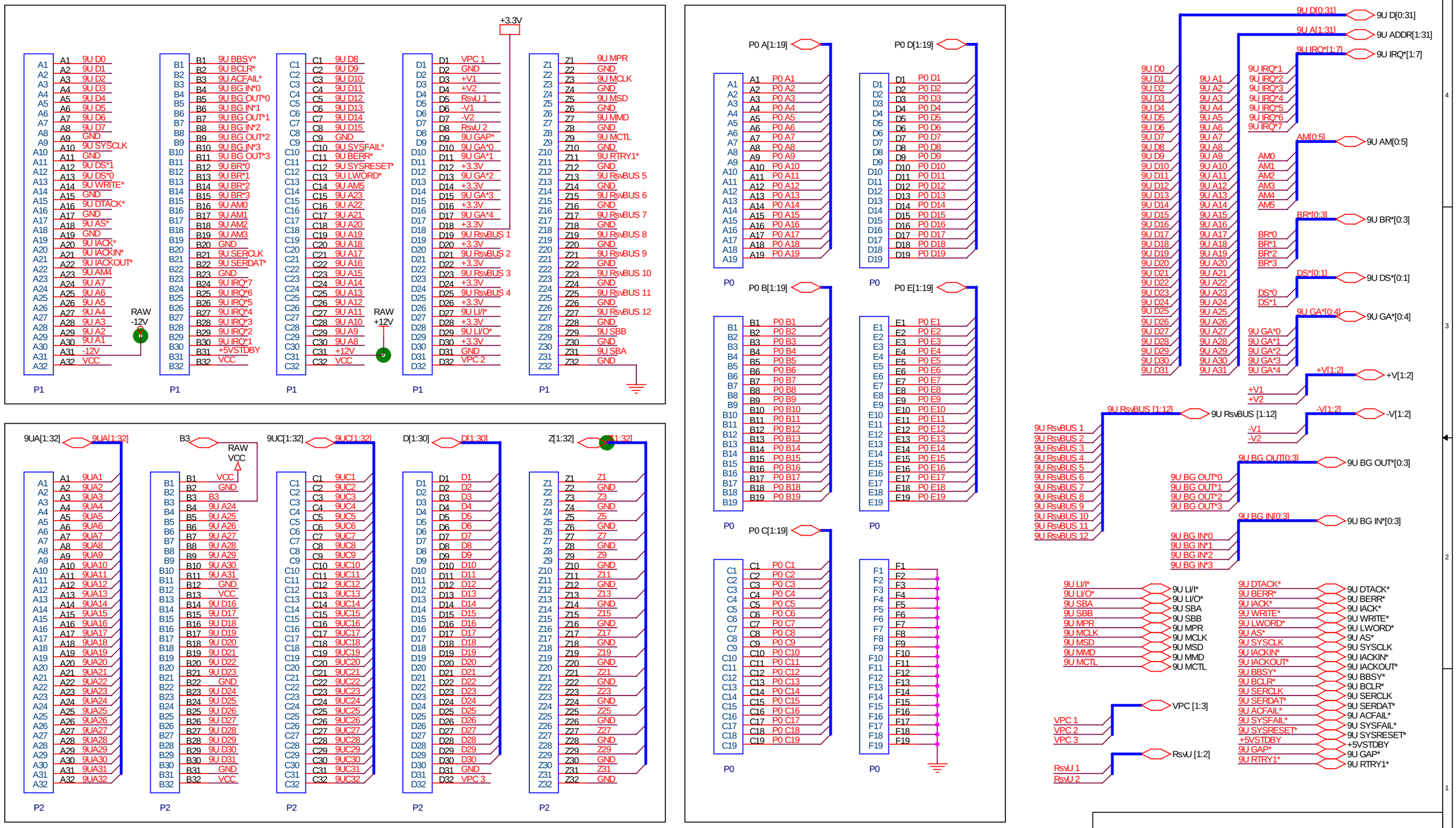

The schematic captur e tool used for this design has a mandatatory bus naming convention that requires bus member net names to end with a numerical digit. For that reason, asterik (*) characters and sometimes text in conventional VME/VIPA signal names have been repositioned to favor numeric en dings.

Title	VME 64x(P) 6U to 9U ADAPTER 9U Connectors		
Size B	Document Number {Doc}		Rev A
Date: Wednesday, February 24, 1999	Sheet 3 of 10		

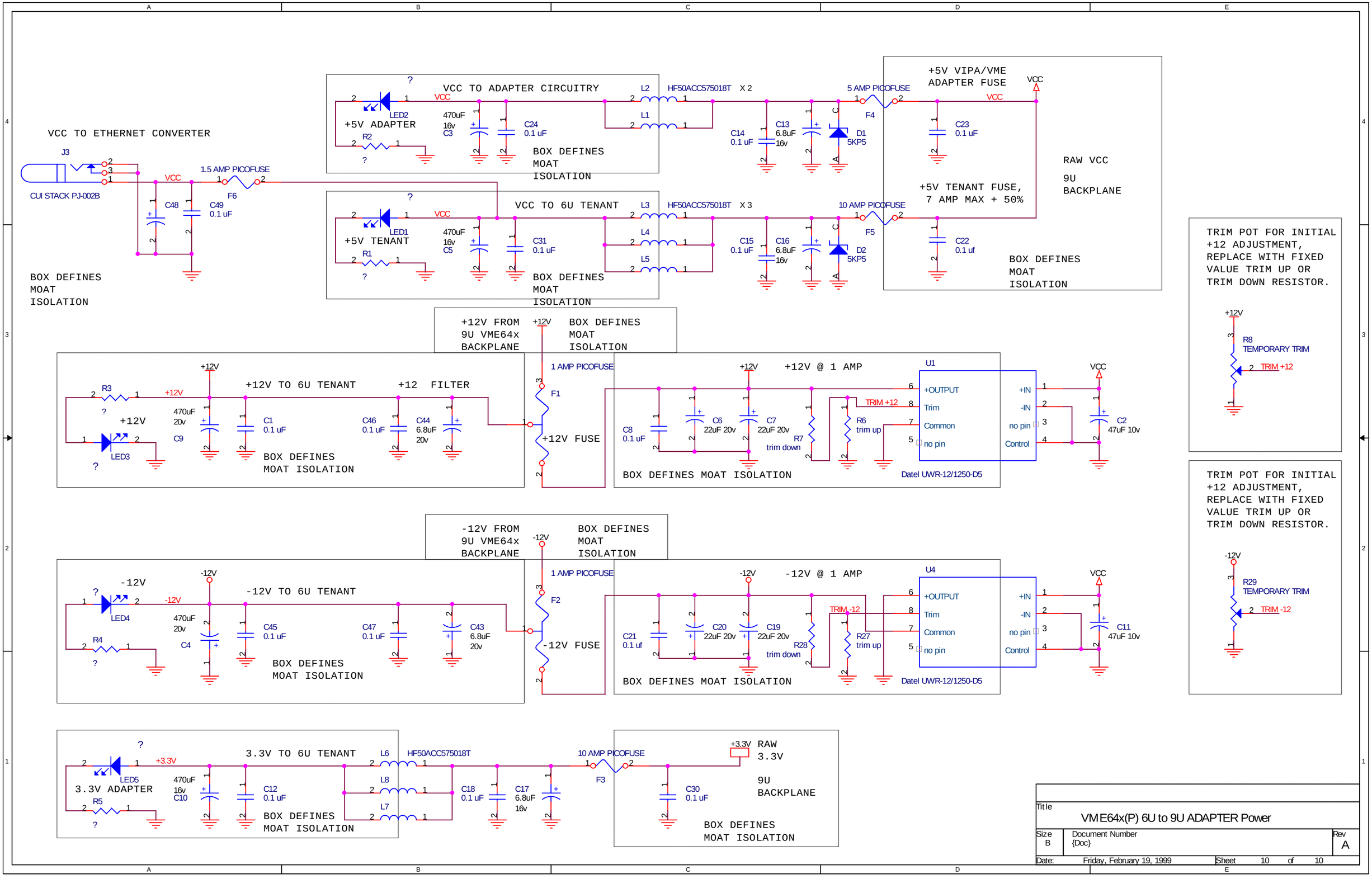
VCC TO ETHERNET CONVERTER
J3
CUI STACK PJ-002B
VCC
1.5 AMP PICOFUSE
F6
C48
C49
0.1 uF
BOX DEFINES MOAT ISOLATION
VCC TO ADAPTER CIRCUITRY
LED2
+5V ADAPTER
R2
470uF 16v C3
C24 0.1 uF
L2
L1
HF50ACC575018T X 2
C14 0.1 uF
C13 6.8uF 16v
5 AMP PICOFUSE
F4
D1 5KP5
+5V VIPA/VME ADAPTER FUSE
C23 0.1 uF
RAW VCC
9U BACKPLANE
VCC TO 6U TENANT
LED1
+5V TENANT
R1
470uF 16v C5
C31 0.1 uF
L3
L4
L5
HF50ACC575018T X 3
C15 0.1 uF
C16 6.8uF 16v
10 AMP PICOFUSE
F5
D2 5KP5
+5V TENANT FUSE, 7 AMP MAX + 50%
C22 0.1 uf
+12V FROM 9U VME64x BACKPLANE
1 AMP PICOFUSE
F1
+12V FUSE
R3
+12V
LED3
470uF 20v C9
+12V TO 6U TENANT
C1 0.1 uF
+12 FILTER
C46 0.1 uF
C44 6.8uF 20v
+12V @ 1 AMP
C8 0.1 uF
C6 22uF 20v
C7 22uF 20v
R7 trim down
R6 trim up
TRIM +12
U1
+OUTPUT
Trim
Common
no pin
+IN
-IN
no pin
Control
Datel UWR-12/1250-D5
C2 47uF 10v
TRIM POT FOR INITIAL +12 ADJUSTMENT, REPLACE WITH FIXED VALUE TRIM UP OR TRIM DOWN RESISTOR.
R8 TEMPORARY TRIM
TRIM +12
-12V FROM 9U VME64x BACKPLANE
1 AMP PICOFUSE
F2
-12V FUSE
-12V
LED4
R4
470uF 20v C4
-12V TO 6U TENANT
C45 0.1 uF
C47 0.1 uF
C43 6.8uF 20v
-12V @ 1 AMP
C21 0.1 uf
C20 22uF 20v
C19 22uF 20v
R28 trim down
R27 trim up
TRIM -12
U4
C11 47uF 10v
TRIM POT FOR INITIAL +12 ADJUSTMENT, REPLACE WITH FIXED VALUE TRIM UP OR TRIM DOWN RESISTOR.
R29 TEMPORARY TRIM
TRIM -12
LED5
3.3V ADAPTER
R5
470uF 16v C10
3.3V TO 6U TENANT
C12 0.1 uF
L6
L8
L7
HF50ACC575018T
C18 0.1 uF
C17 6.8uF 16v
10 AMP PICOFUSE
F3
+3.3V
RAW 3.3V
9U BACKPLANE
C30 0.1 uF
Title
VME64x(P) 6U to 9U ADAPTER Power
Size B
Document Number {Doc}
Rev A
Date: Friday, February 19, 1999
Sheet 10 of 10

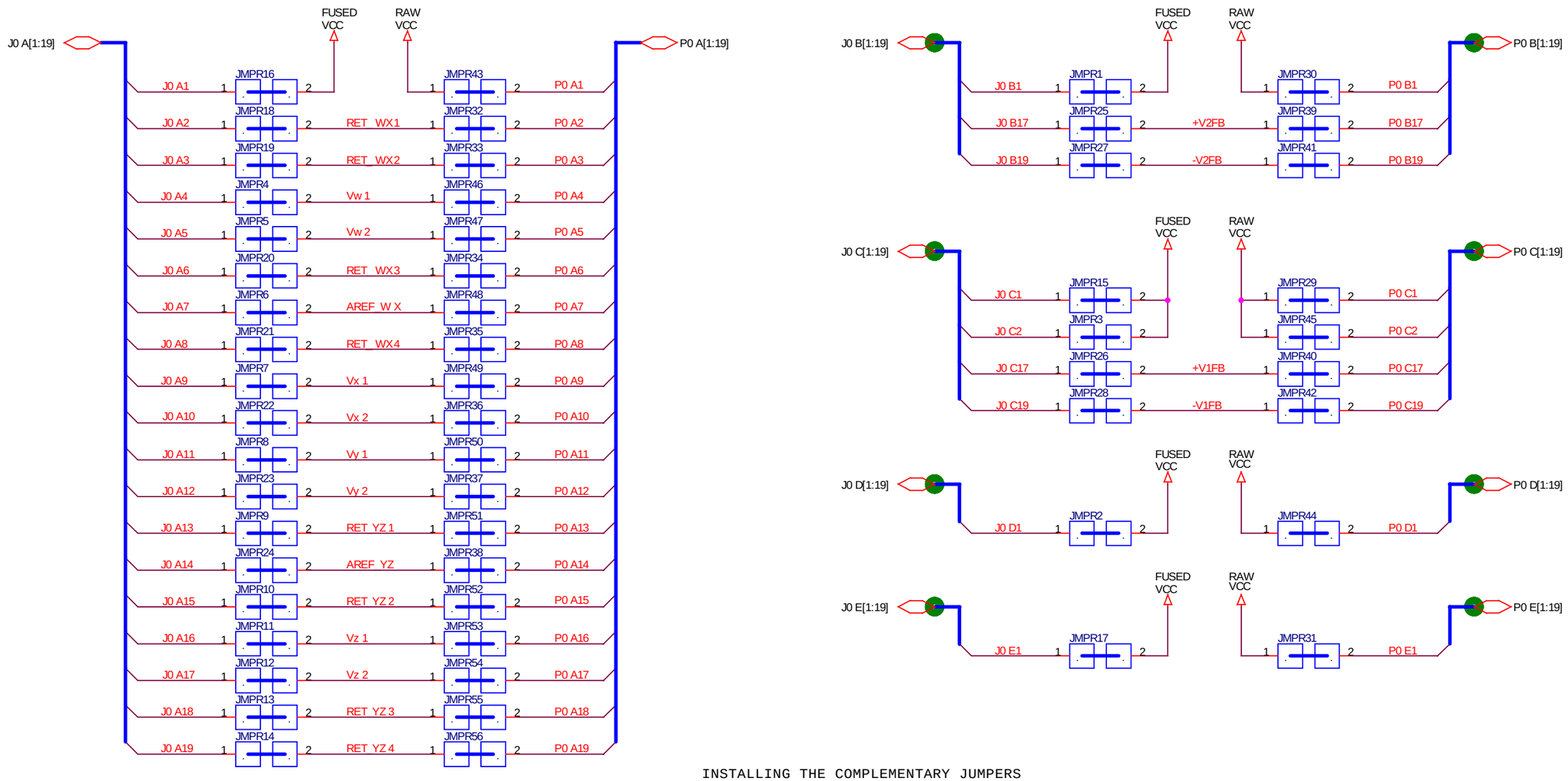

INSTALLING THE COMPLEMENTARY JUMPERS
PLACES THESE WIDE TRACE WIDTH NETS IN
PARALLEL WITH THE EXISTING NARROW TRACE
NETS. FOR VME64x THE NARROW TRACES WILL
SUFFICE FOR THE "USER DEFINED" (UD) SIGNALS.
FOR VME64xP, THE WIDE TRACES WILL BE NEEDED
TO CARRY AUXILIARY POWER.

IN SUMMARY, ALL JUMPERS SHOULD BE INSTALLED
FOR VME64xP, AND ALL JUMPERS SHOULD BE
REMOVED FOR VME64x.

Title: VME64x(P) 6U to 9U ADAPTER P0 Options		
Size: B	Document Number: {Doc}	Rev: A
Date: Wednesday, February 24, 1999	Sheet 8 of 10	

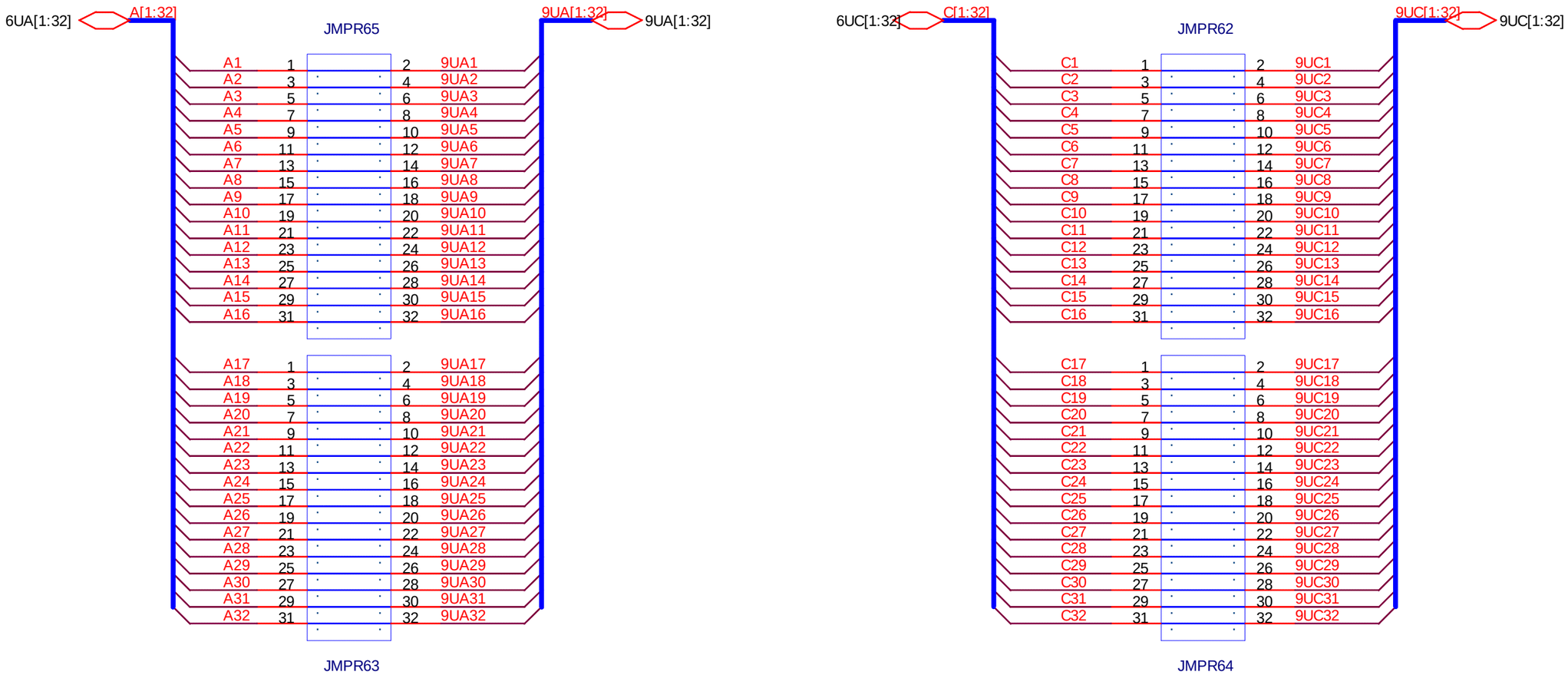

Title	{Title}		
Size A	Document Number {Doc}		Rev {RevCode}
Date: Friday, February 19, 1999		Sheet 9 of 10	

ESD STRIP TOP

ESD STRIP BOTTOM

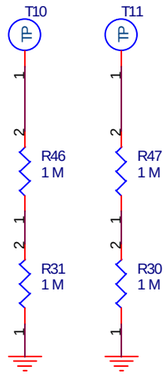

BYPASS CAPACITORS, ONE FOR EVERY IC AND RESISTOR NETWORK, WITH MULTIPLE CAPS ON ALTE RA PART.

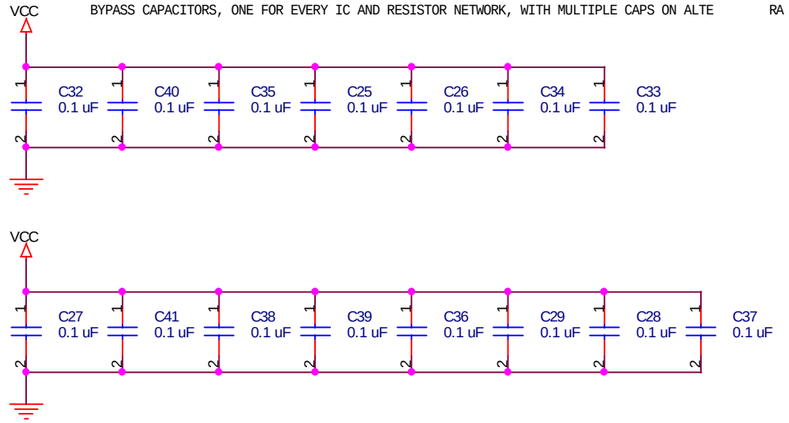

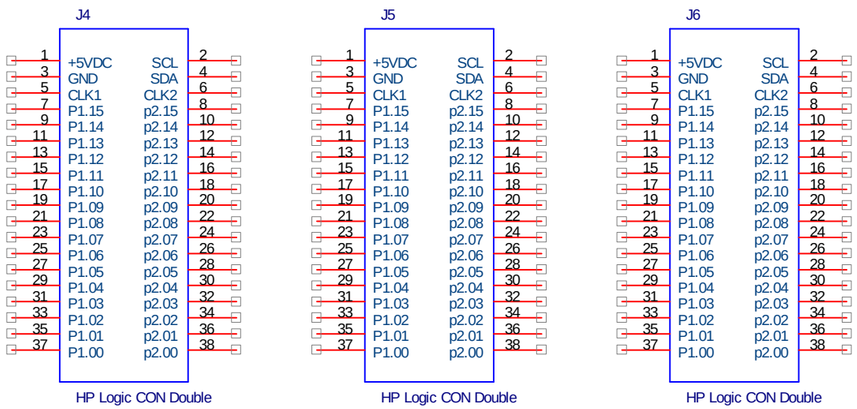

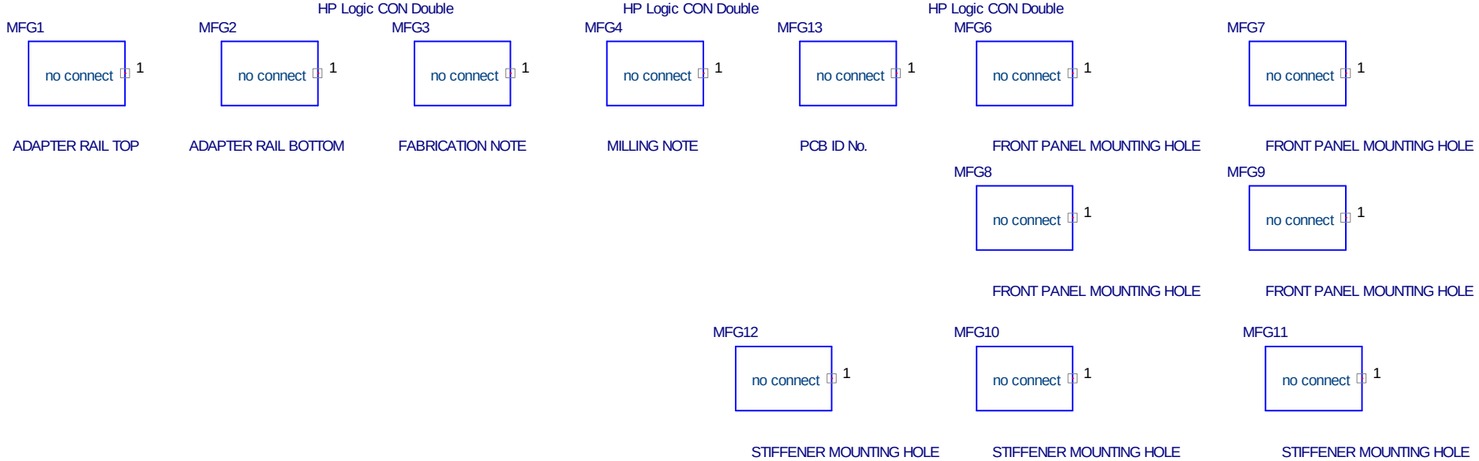

Title: VME64x (P) 6U to 9U ADAPTER Miscellaneous		
Size B	Document Number {Doc}	Rev A
Date: Wednesday, February 24, 1999	Sheet 7 of 10	