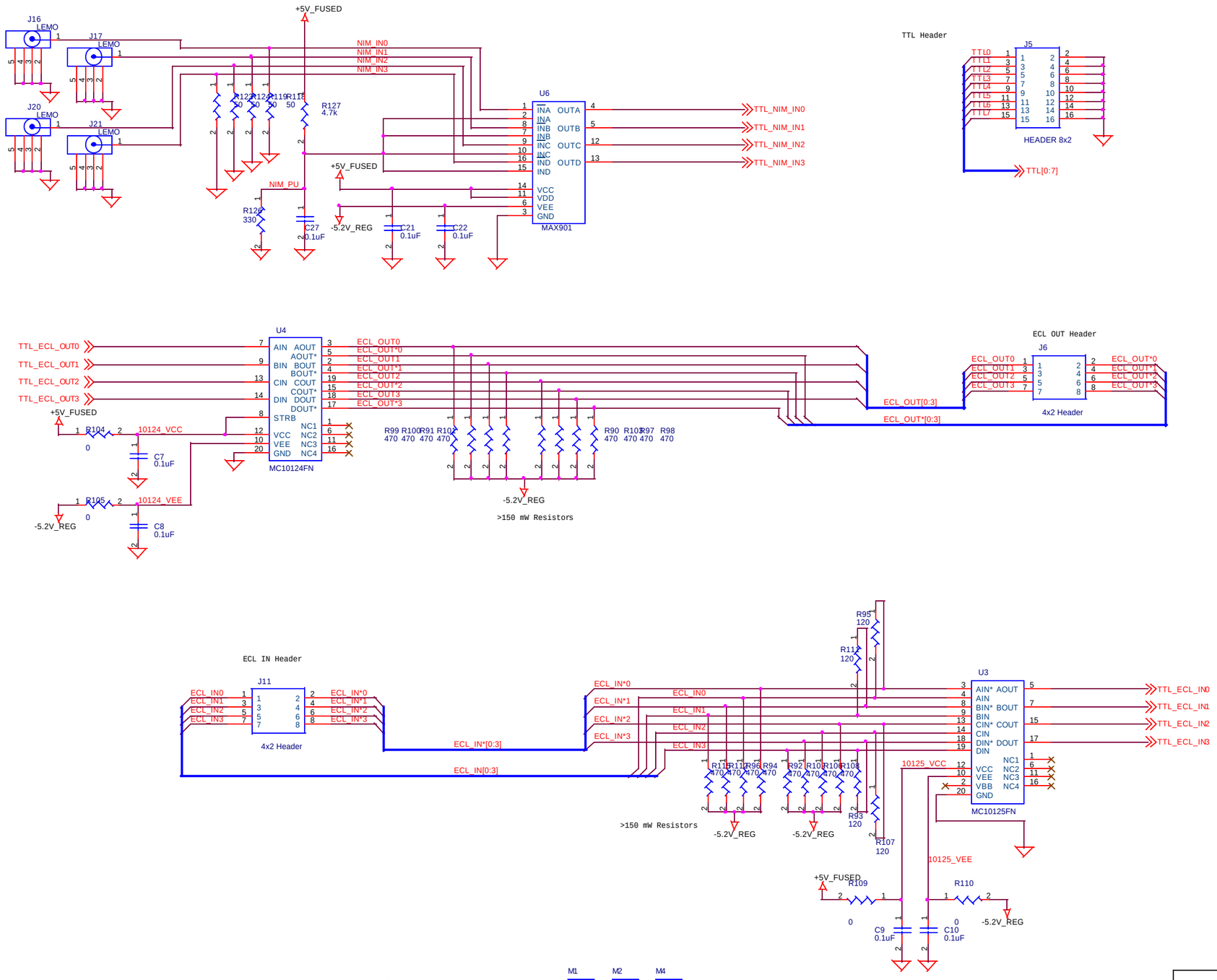

Title	Programmable Mezzanine Card
Size	Document Number: Brad Hall / Matt Kindschi / Jeff Andresen
Rev	<RevCode>
Date: Thursday, June 07, 2001	Sheet 1 of 6

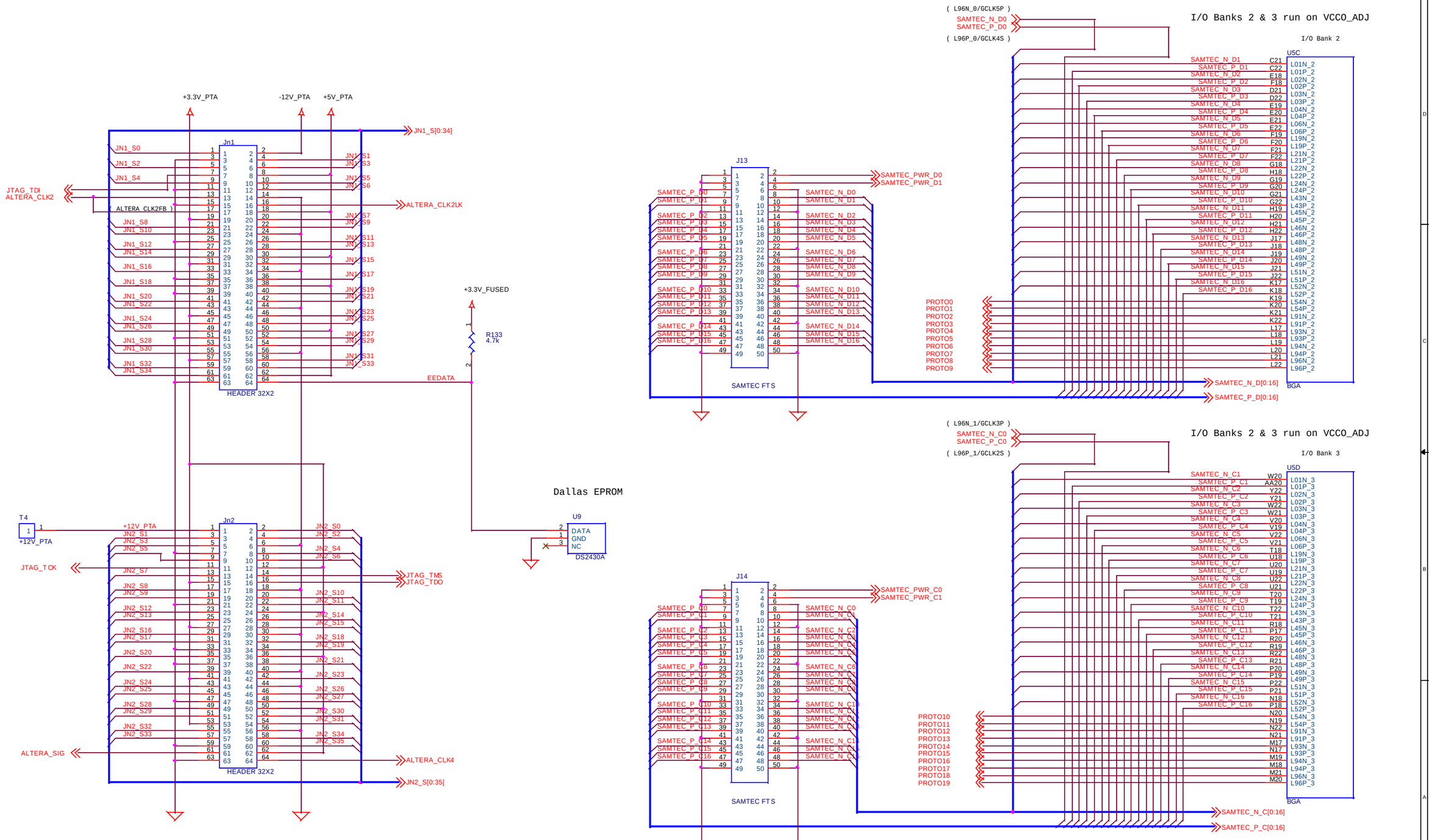

Title
Programmable Mezzanine Card

Size | Document Number | Rev
Brad Hall / Matt Kindschi / Jeff Andresen | 1

Date: Thursday, June 07, 2001 | Sheet 2 of 6

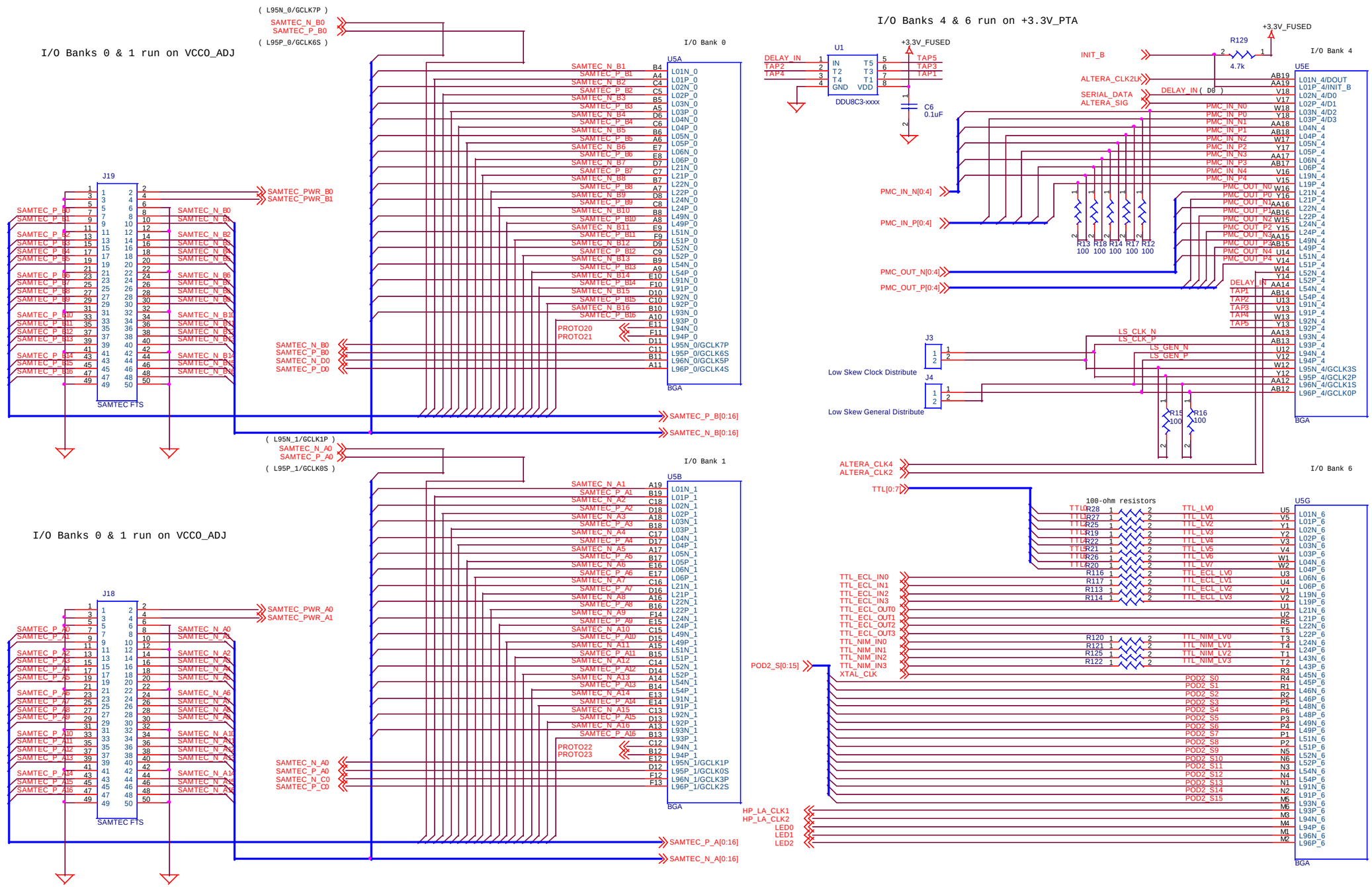

Title	Programmable Mezzanine Card
Size	Document Number: Brad Hall / Matt Kindschi / Jeff Andresen
Rev	<RevCode>
Date: Thursday, June 07, 2001	Sheet 3 of 6

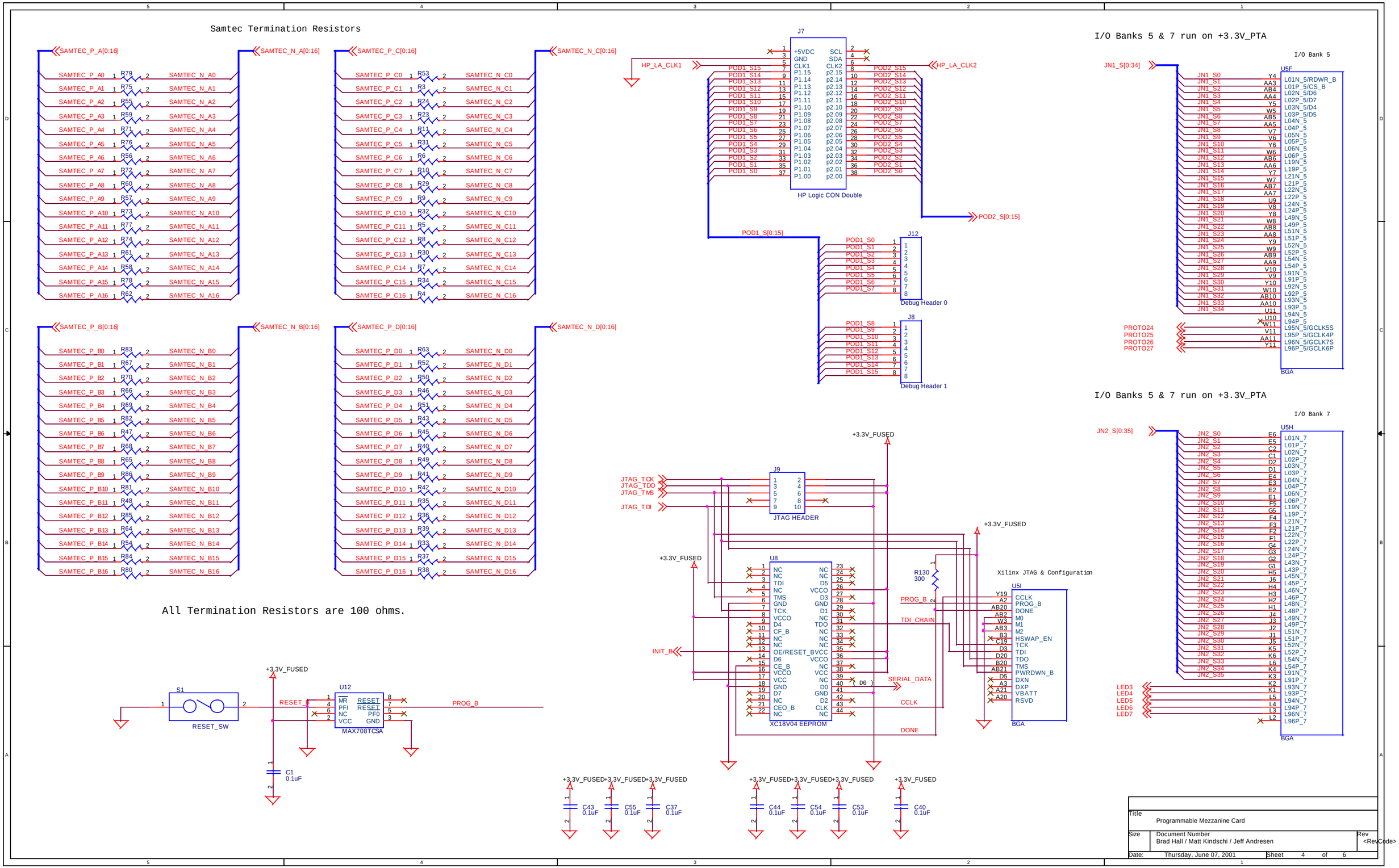
Samtec Termination Resistors
SAMTEC_P_A[0:16]
SAMTEC_N_A[0:16]
SAMTEC_P_B[0:16]
SAMTEC_N_B[0:16]
SAMTEC_P_C[0:16]
SAMTEC_N_C[0:16]
SAMTEC_P_D[0:16]
SAMTEC_N_D[0:16]
All Termination Resistors are 100 ohms.
J7
HP Logic CON Double
HP_LA_CLK1
HP_LA_CLK2
POD1_S[0:15]
POD2_S[0:15]
J12
Debug Header 0
J8
Debug Header 1
I/O Banks 5 & 7 run on +3.3V_PTA
I/O Bank 5
JN1_S[0:34]
U5F
BGA
I/O Banks 5 & 7 run on +3.3V_PTA
I/O Bank 7
JN2_S[0:35]
U5H
BGA
J9
JTAG HEADER
JTAG_TCK
JTAG_TDO
JTAG_TMS
JTAG_TDI
+3.3V_FUSED
U8
XC18V04 EEPROM
INIT_B
R130
300
PROG_B
TDI_CHAIN
SERIAL_DATA
CCLK
DONE
Xilinx JTAG & Configuration
U5I
BGA
S1
RESET_SW
U12
MAX708TCSA
RESET_B
PROG_B
C1
0.1uF
C43
0.1uF
C55
0.1uF
C37
0.1uF
C44
0.1uF
C54
0.1uF
C53
0.1uF
C40
0.1uF
Title
Programmable Mezzanine Card
Size
Document Number
Brad Hall / Matt Kindschi / Jeff Andresen
Rev
<RevCode>
Date: Thursday, June 07, 2001
Sheet 4 of 6

PROTOTYPE AREA

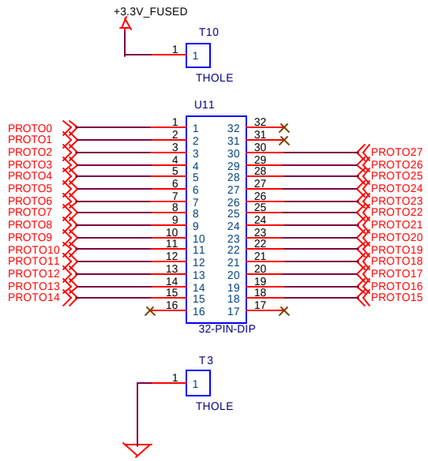

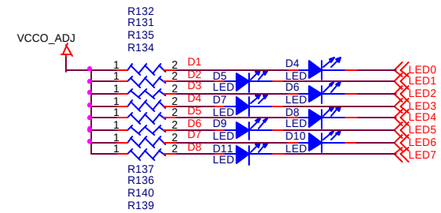

PMC-to-PMC CONNECTORS

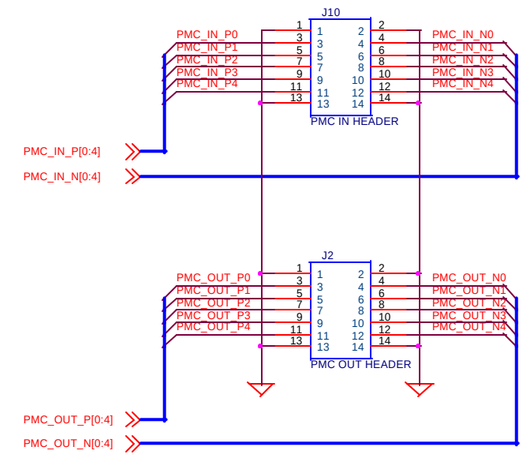

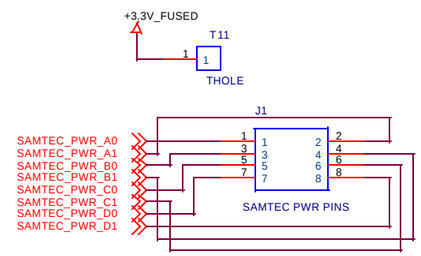

50.0000 MHz Oscillator

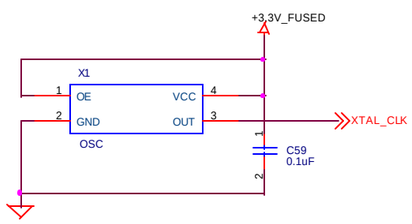

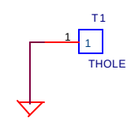

Ground Pins

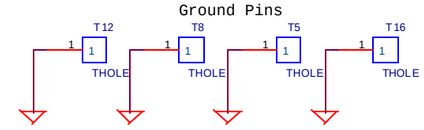

Ground Clips

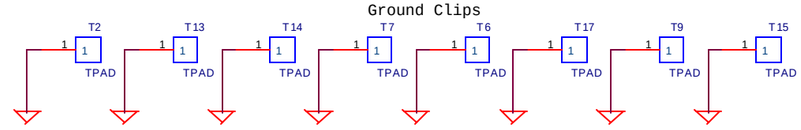

Title	Programmable Mezzanine Card	
Size	Document Number Brad Hall / Matt Kindschi / Jeff Andresen	Rev <RevCode>
Date: Thursday, June 07, 2001	Sheet 5 of 6	

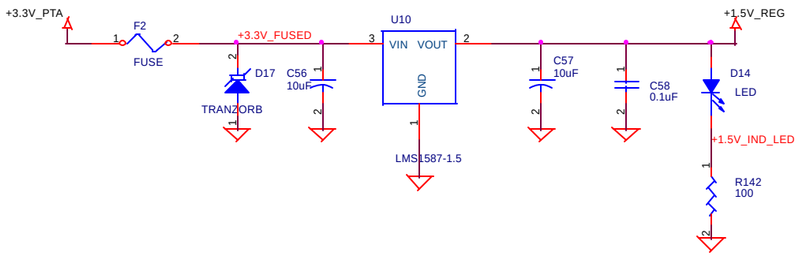

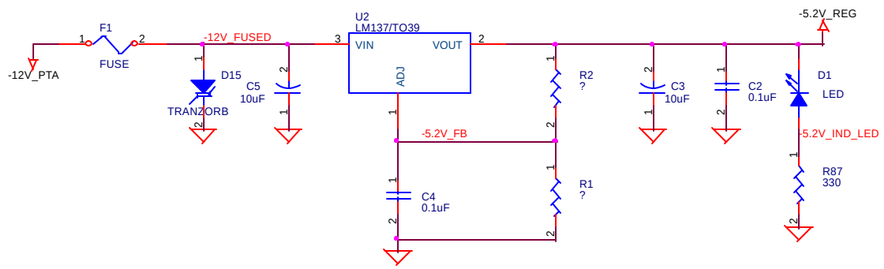

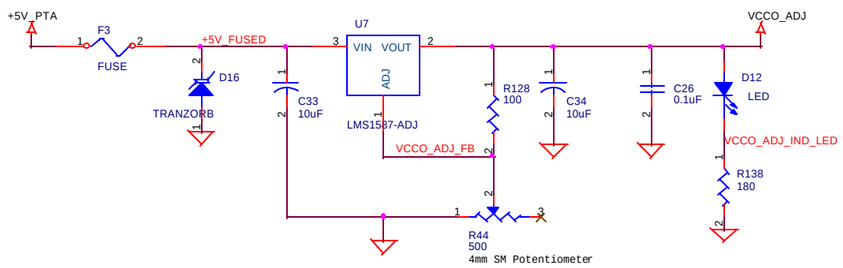

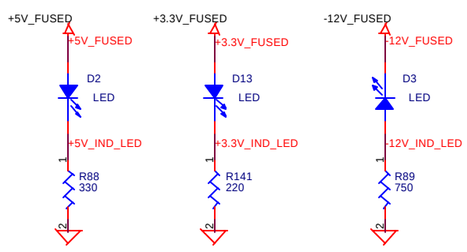

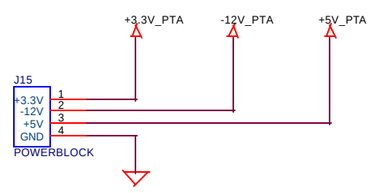

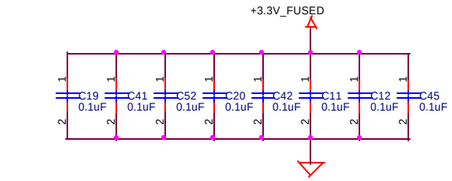

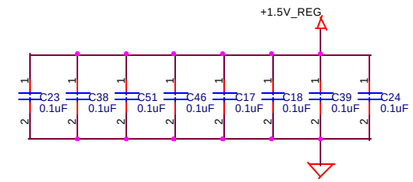

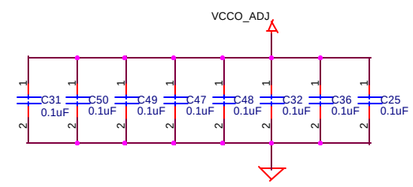

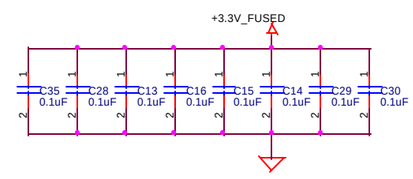

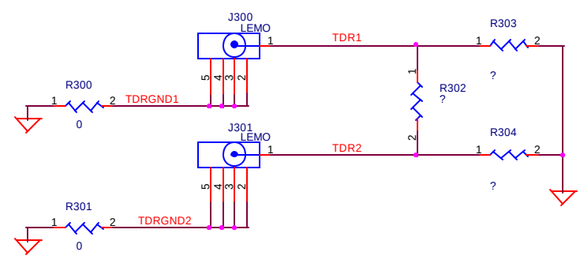

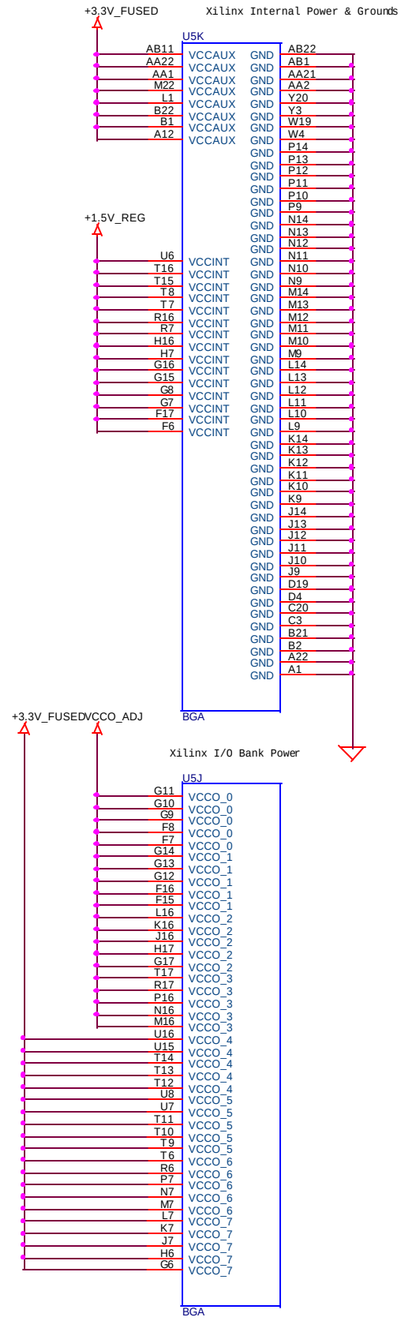

Title	Programmable Mezzanine Card	
Size	Document Number Brad Hall / Matt Kindschi / Jeff Andresen	Rev <RevCode>
Date: Thursday, June 07, 2001	Sheet 6 of 6	