PRSNT1#	PRSNT2#	Board Wattage
0	0	7.5W Maximum
0	1	25W Maximum
1	0	15W Maximum
1	1	No Board

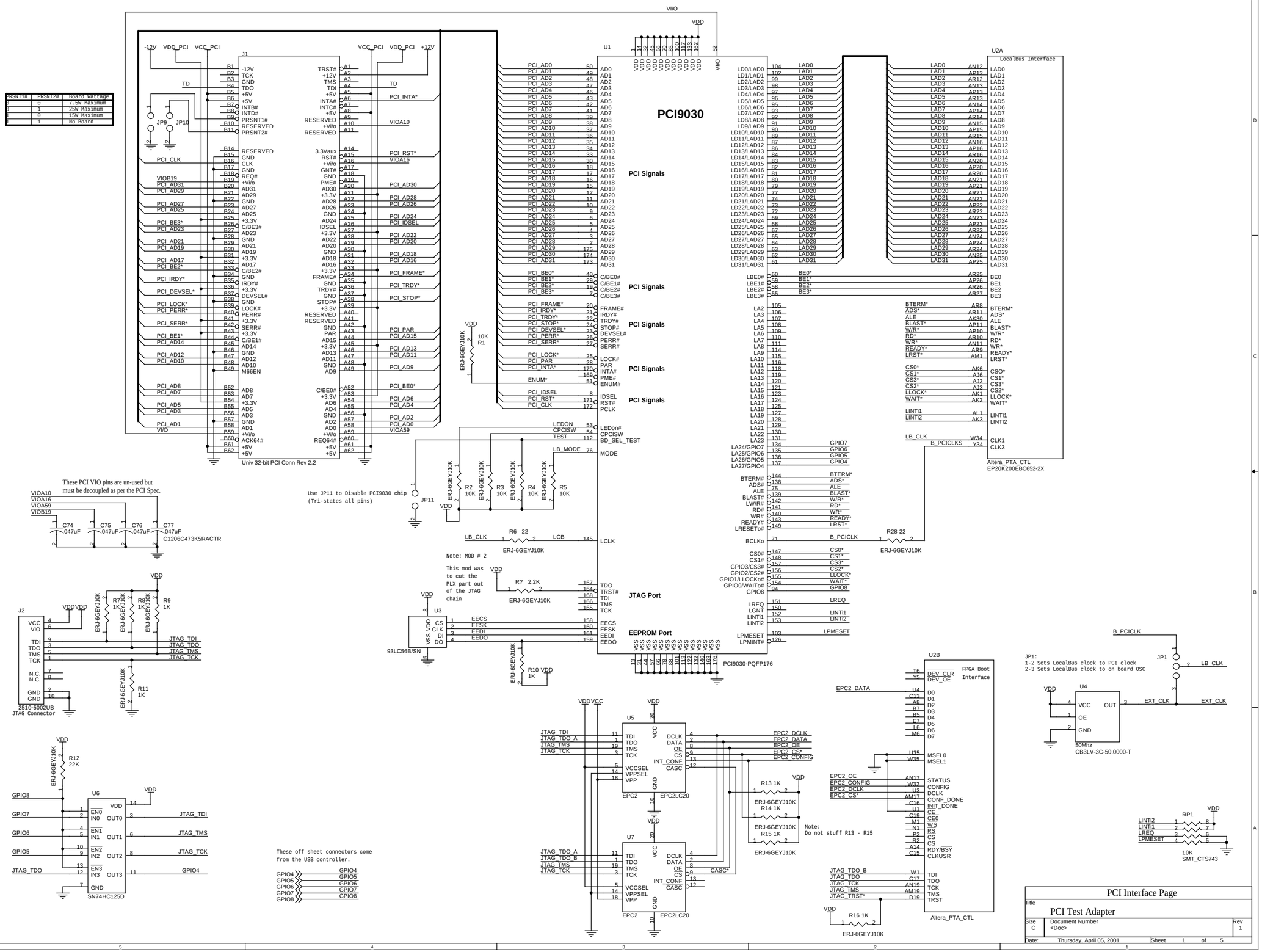

PCI Interface Page

Title: PCI Test Adapter

Size: C | Document Number: <Doc> | Rev: 1

Date: Thursday, April 05, 2001 | Sheet 1 of 5

Bank 0

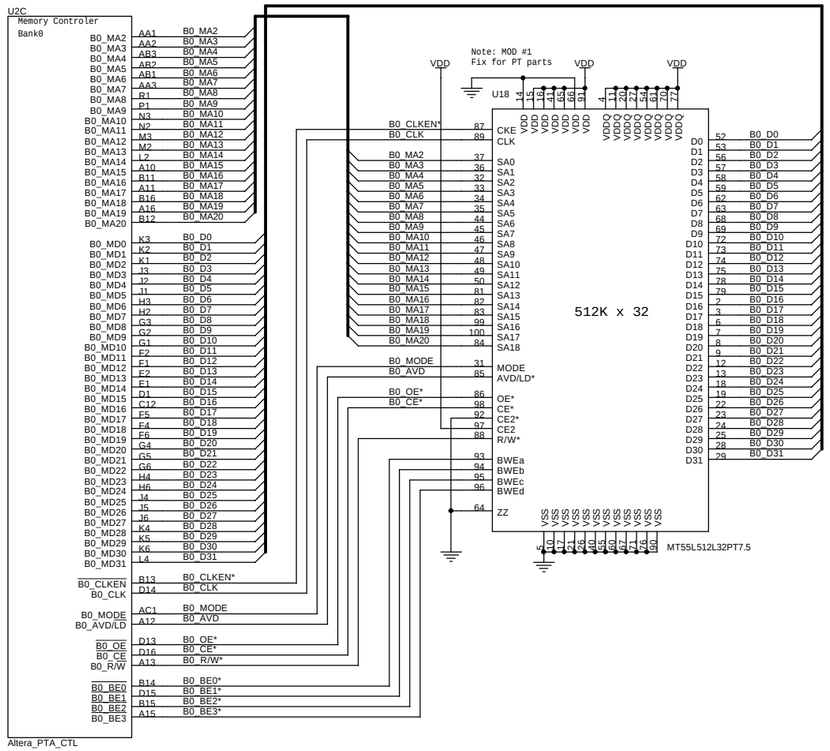

Bank 1

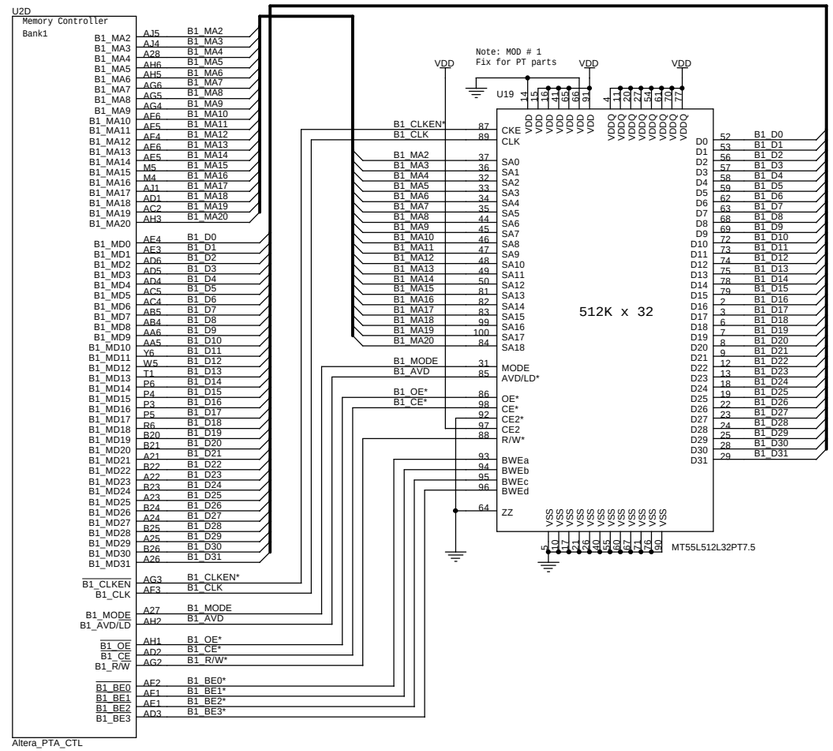

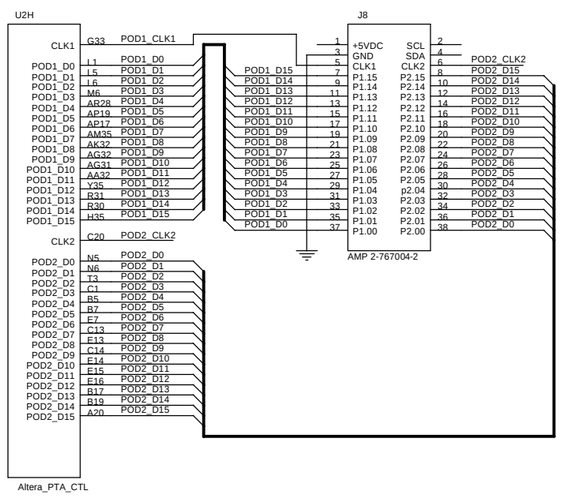

Memory Page		
Title: PCI Test Adapter		
Size: C	Document Number: <Doc>	Rev: 1
Date: Thursday, April 05, 2001	Sheet 2 of 5	

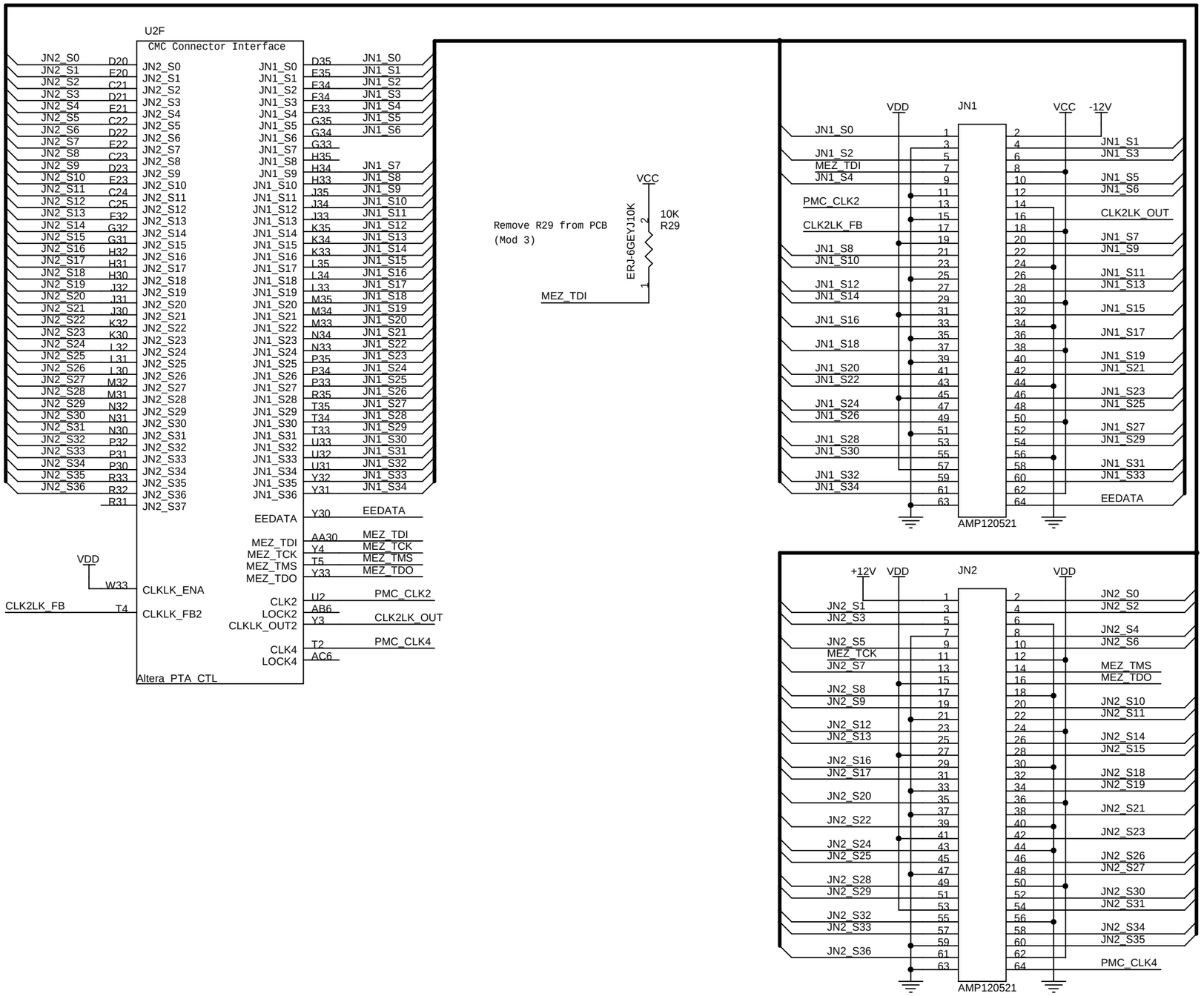

Note:
Mating AMP Connector
for JN1 & JN2: 120523-1

CMC Interface Page		
Title: PCI Test Adapter		
Size: B	Document Number: <Doc>	Rev: 1
Date: Thursday, April 05, 2001	Sheet 3 of 5	

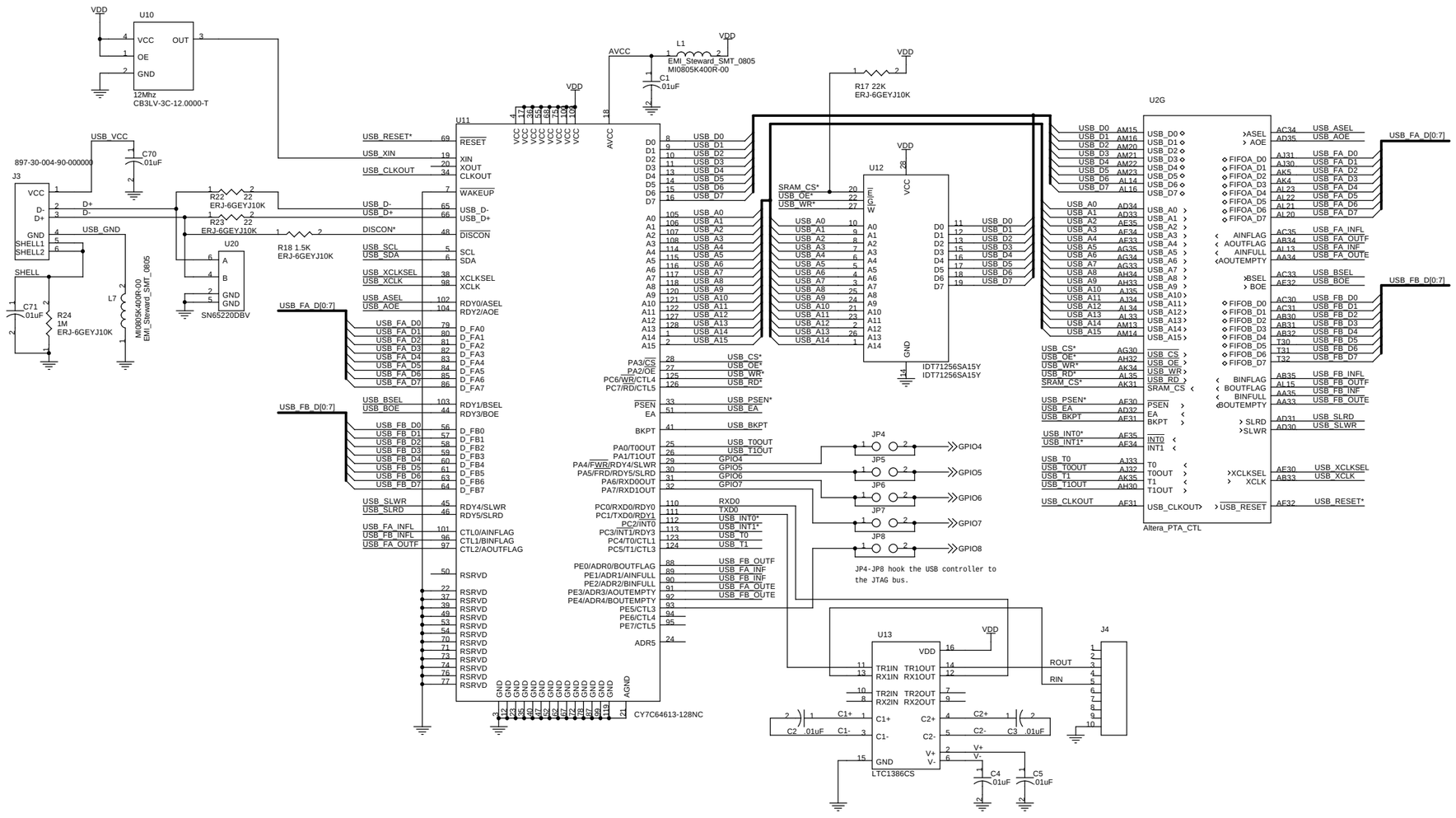

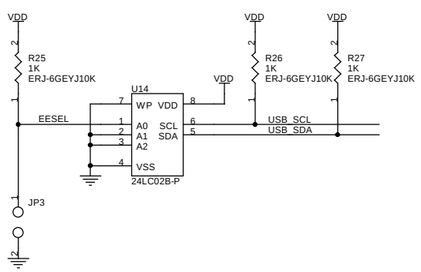

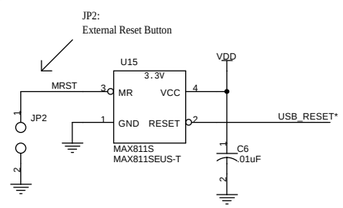

Title	USB Interface Page
	PCI Test Adapter
Size C	Document Number <Doc>
Rev	1
Date:	Thursday, April 05, 2001
Sheet	4 of 5

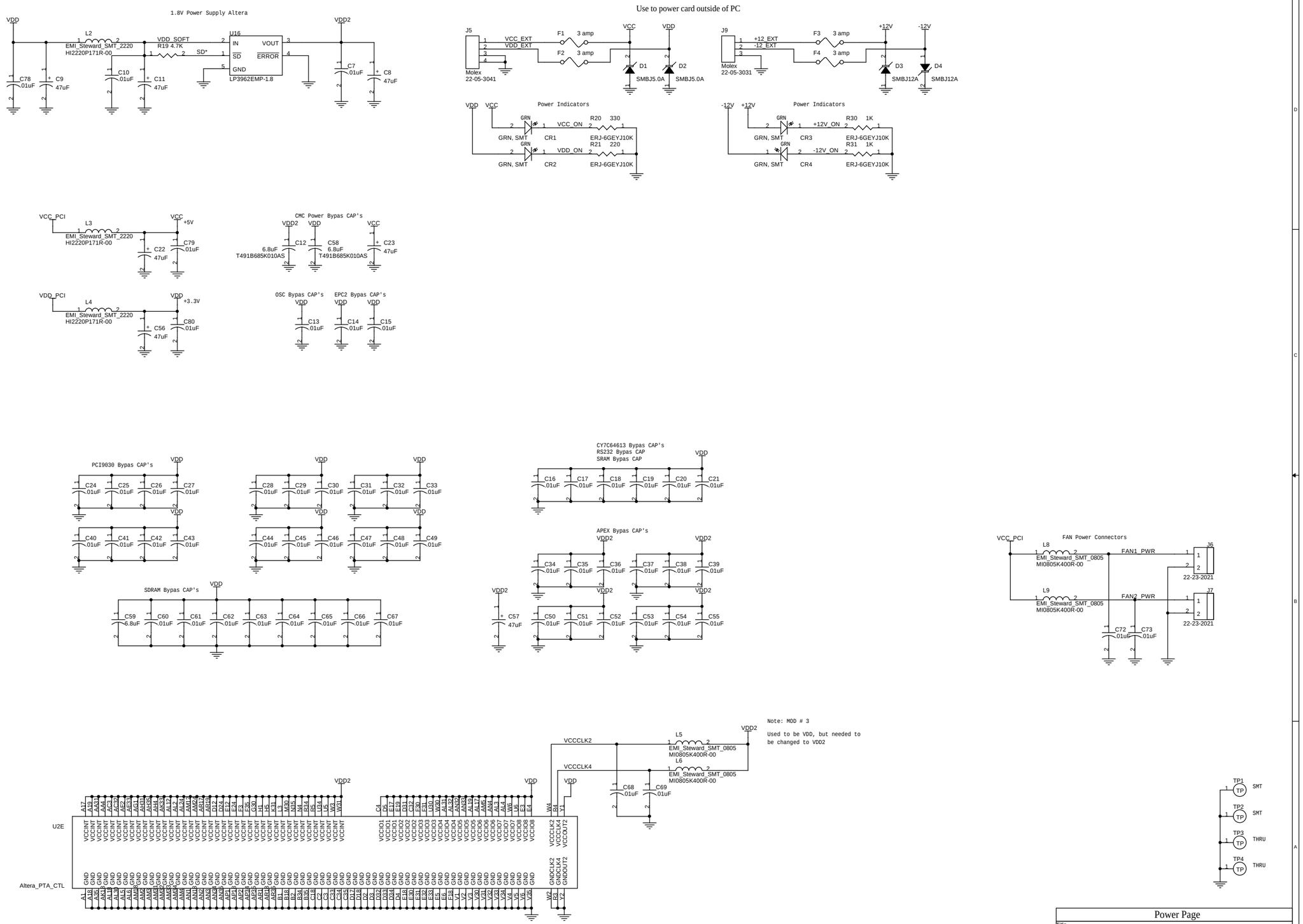

Power Page

Title: PCI Test Adapter

Size	Document Number	Rev
C	<Doc>	1

Date: Thursday, April 05, 2001 Sheet 5 of 5