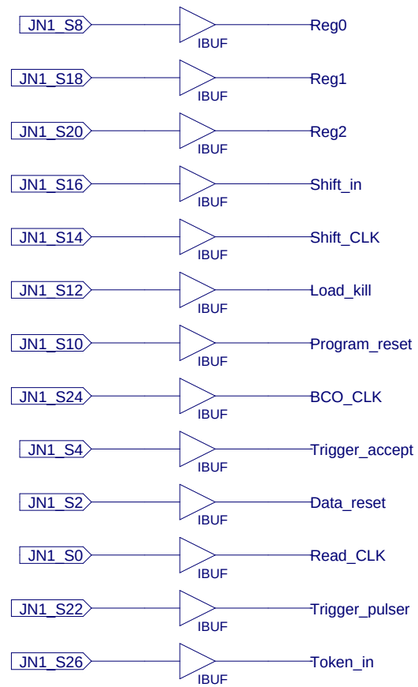

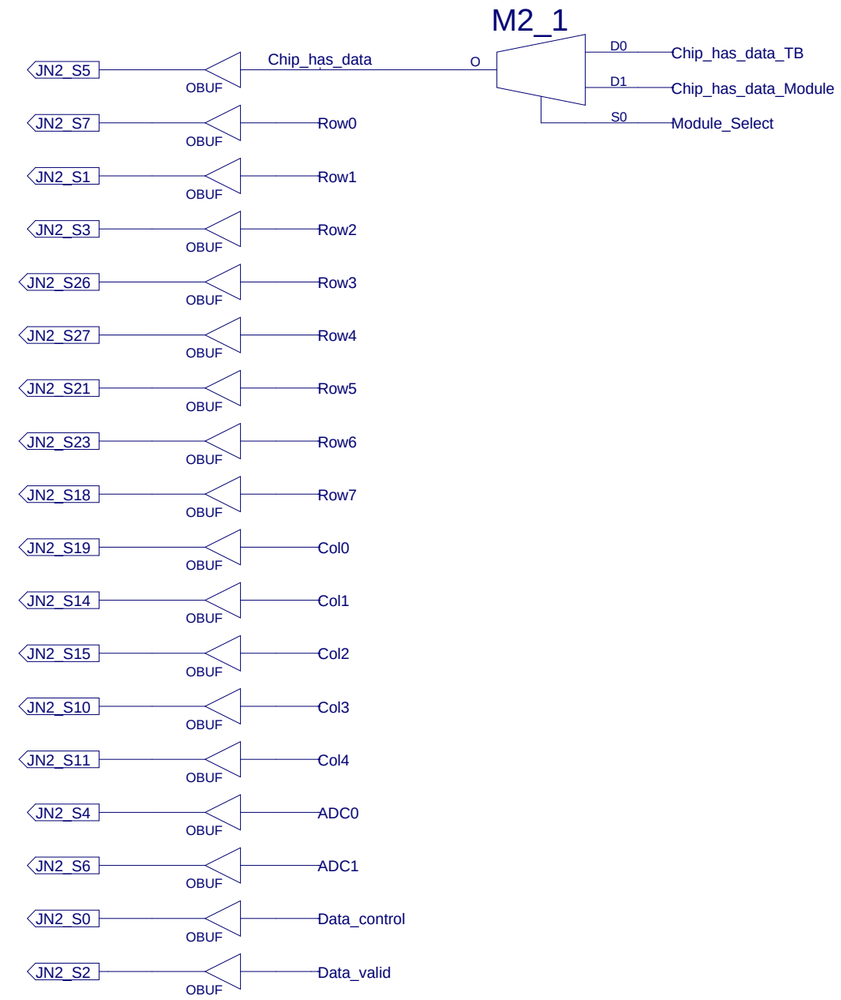

FPIX1 Software Pass-Through Rev 1.3

The only difference between Rev 1.2 and Rev 1.3 is DATA_VALID is a single ended input. R53 must be removed. This version created to accomodate a faulty DATA_VALID driver on the pixel module.

Use for both FPIX1 test beam '02 board and for FPIX1 Pixel Module.

Use SAMTEC C and D for FPIX1 test beam '02 board

Use SAMTEC C and A for Pixel Module

Jump J5 pin 2 to J5 pin 1 to select Module

XILINX

Title:	SW Passthru to New FPIX1 Inner Board. JN1/JN2 signals.
Name:	Bradley Hall.
Date:	April 8, 2003
Sheet	1 of 4

SAMTEC D to FPIX1Test Beam Board

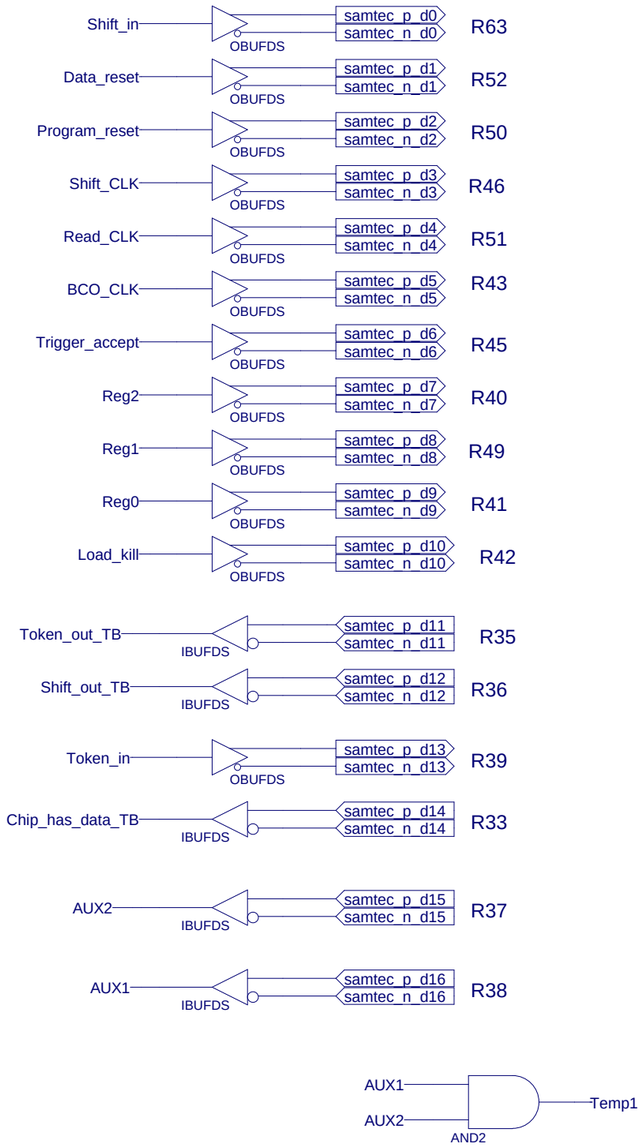

SAMTEC C to FPIX1 Test Beam Board or Module

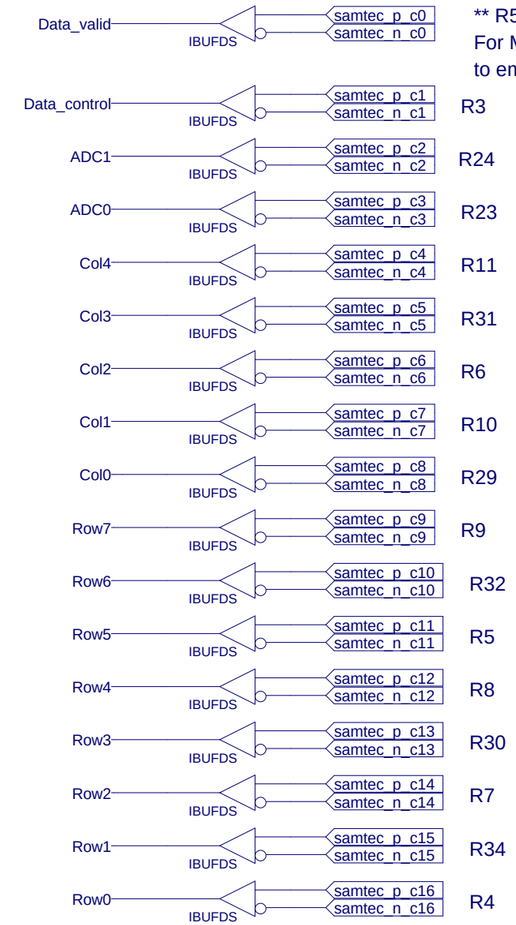

** R53 must be removed for Module**
For Module connect neg side of R53 to Bias Level
to emulate differential input. FPIX1 modules with
5 chips only has a DataValid swing of ~0 to ~1.3V.

XILINX

Title:	SW Passthru to SAMTEC C and D.
Name:	Bradley Hall.
Date:	April 8, 2003
Sheet	2 of 4

SAMTEC A to FPIX1 Module

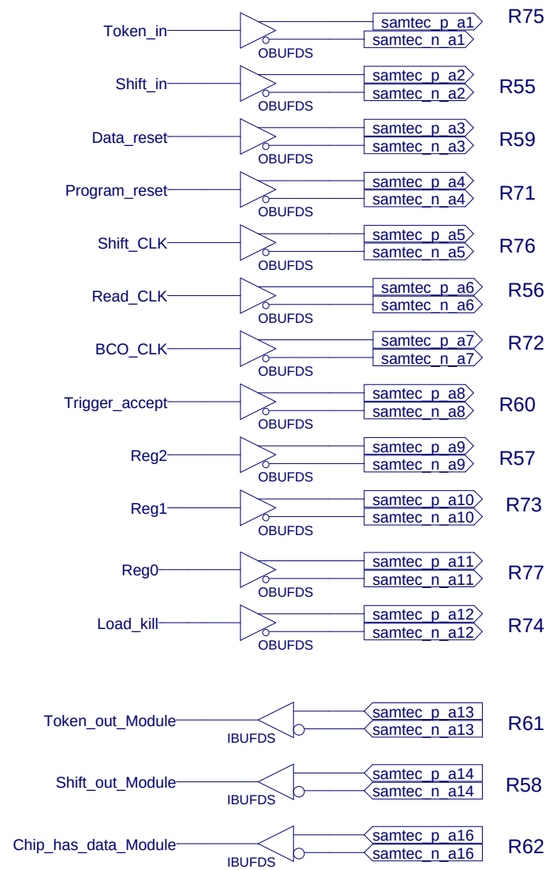

Title:	SW Passthru to SAMTEC A.
Name:	Bradley Hall.
Date:	April 8, 2003
Sheet	3 of 4

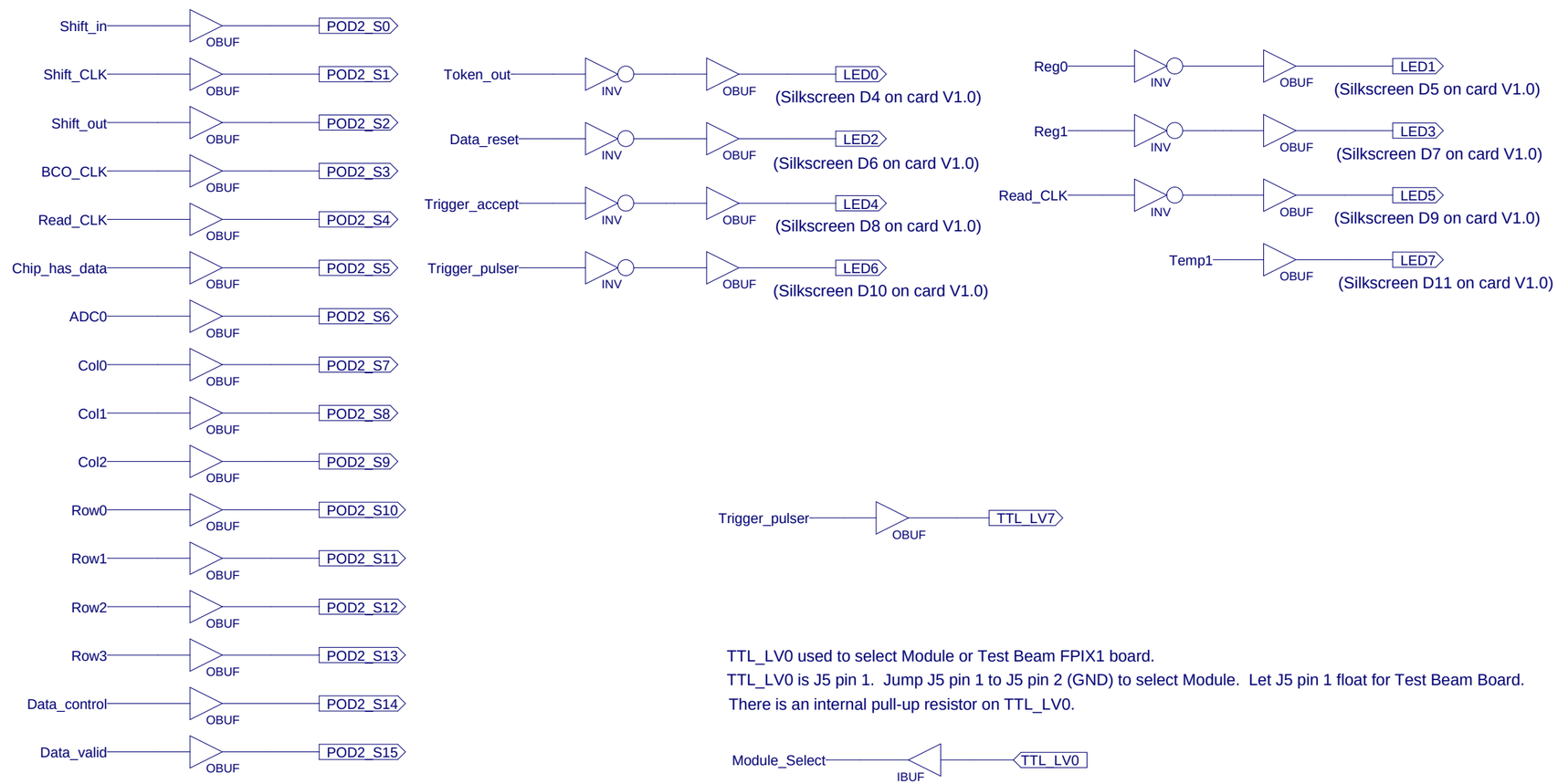

Title:	SW Passthru to New FPIX1 Inner Board. Misc Signals.
Name:	Bradley Hall.
Date:	April 8, 2003
Sheet	4 of 4