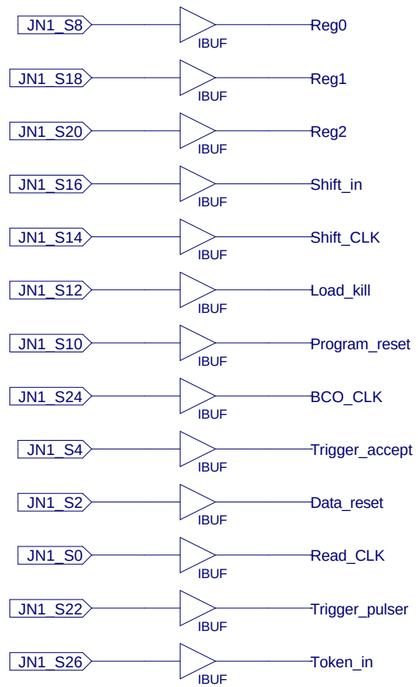

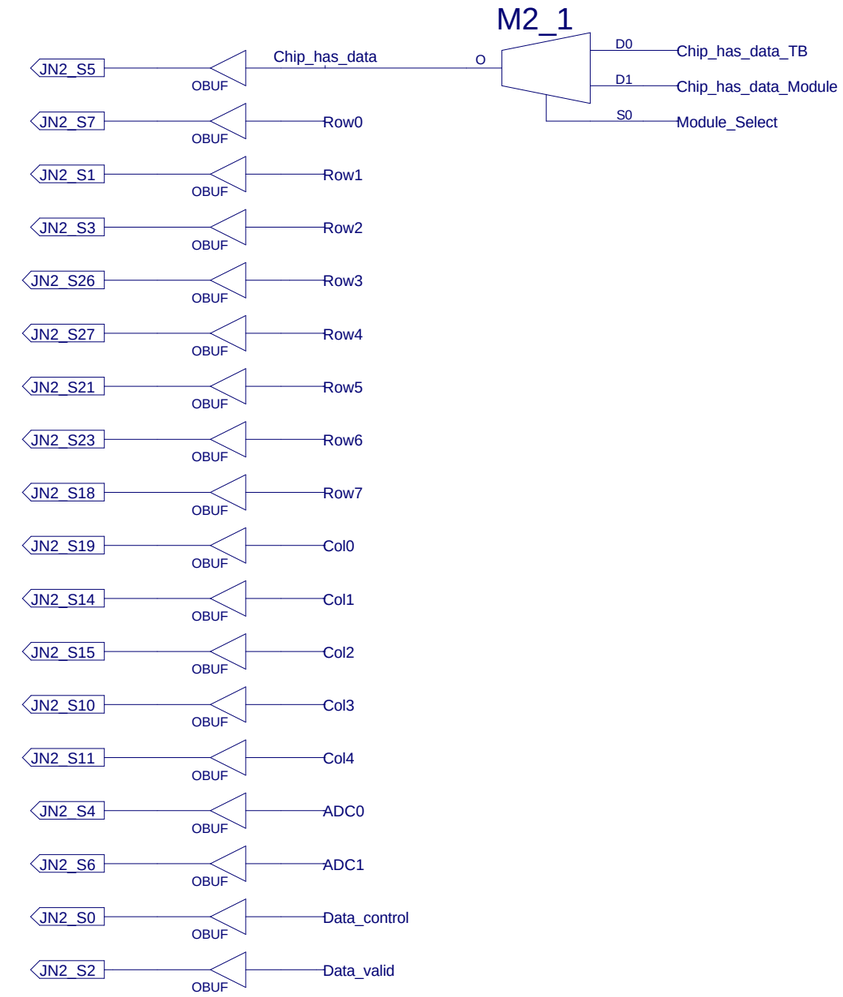

FPIX1 Software Pass-Through Rev 1.2

Use for both FPIX1 test beam '02 board
and for FPIX1 Pixel Module.

Use SAMTEC C and D for FPIX1 test beam '02 board

Use SAMTEC C and A for Pixel Module

Jump J5 pin 2 to J5 pin 1 to select Module

XILINX

Title:	SW Passthru to New FPIX1 Inner Board. JN1/JN2 signals.
Name:	Bradley Hall.
Date:	November 1, 2002
Sheet	1 of 4

SAMTEC D to FPIX1Test Beam Board

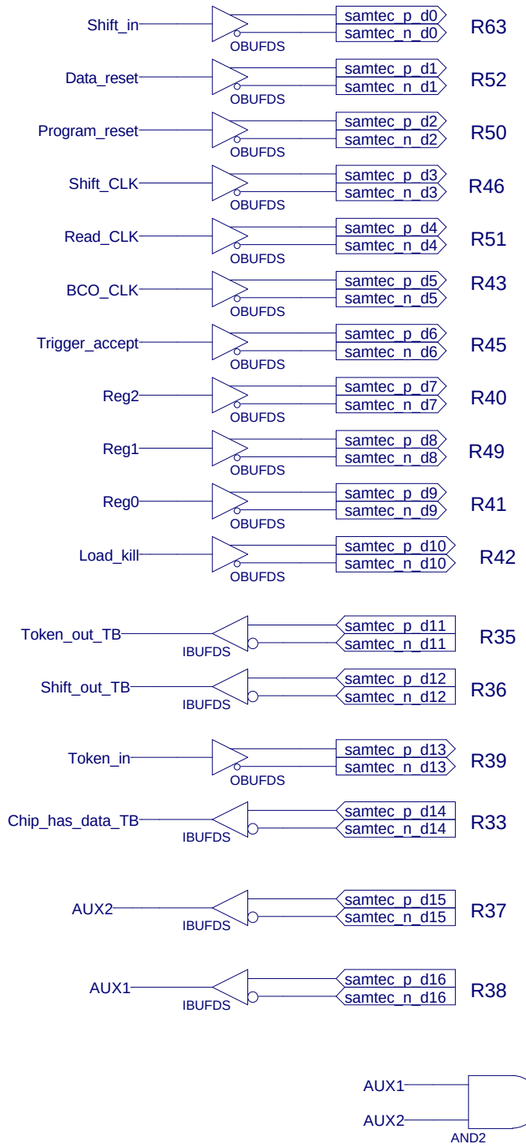

SAMTEC C to FPIX1 Test Beam Board or Module

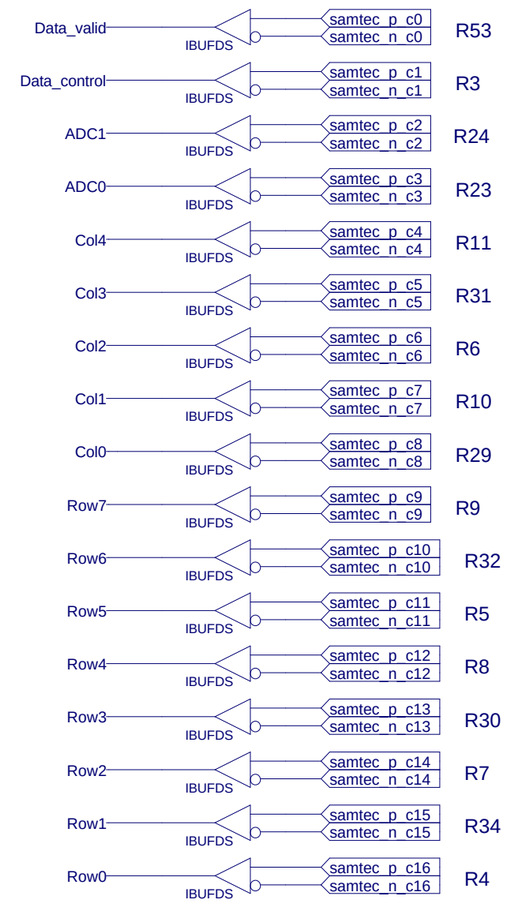

XILINX

Title:	SW Passthru to SAMTEC C and D.
Name:	Bradley Hall.
Date:	November 1, 2002
Sheet	2 of 4

SAMTEC A to FPIX1 Module

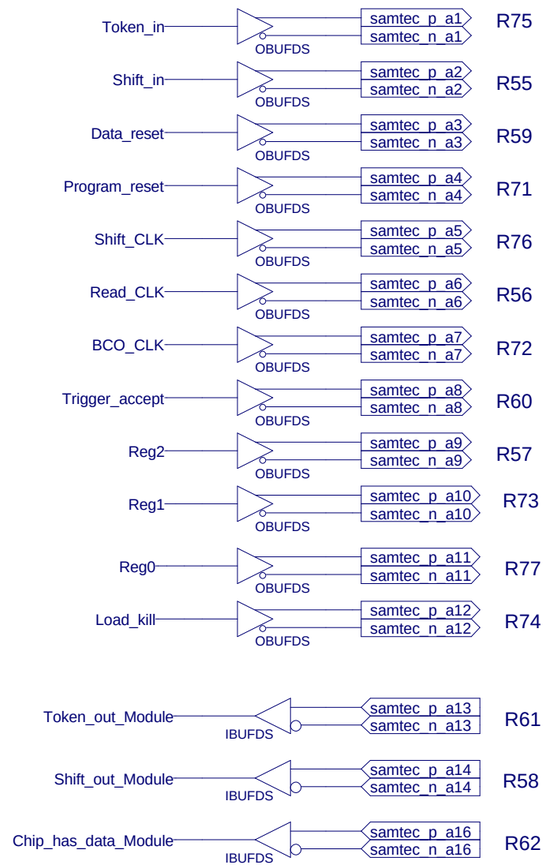

XILINX

Title:	SW Passthru to SAMTEC A.
Name:	Bradley Hall.
Date:	November 1, 2002
Sheet	3 of 4

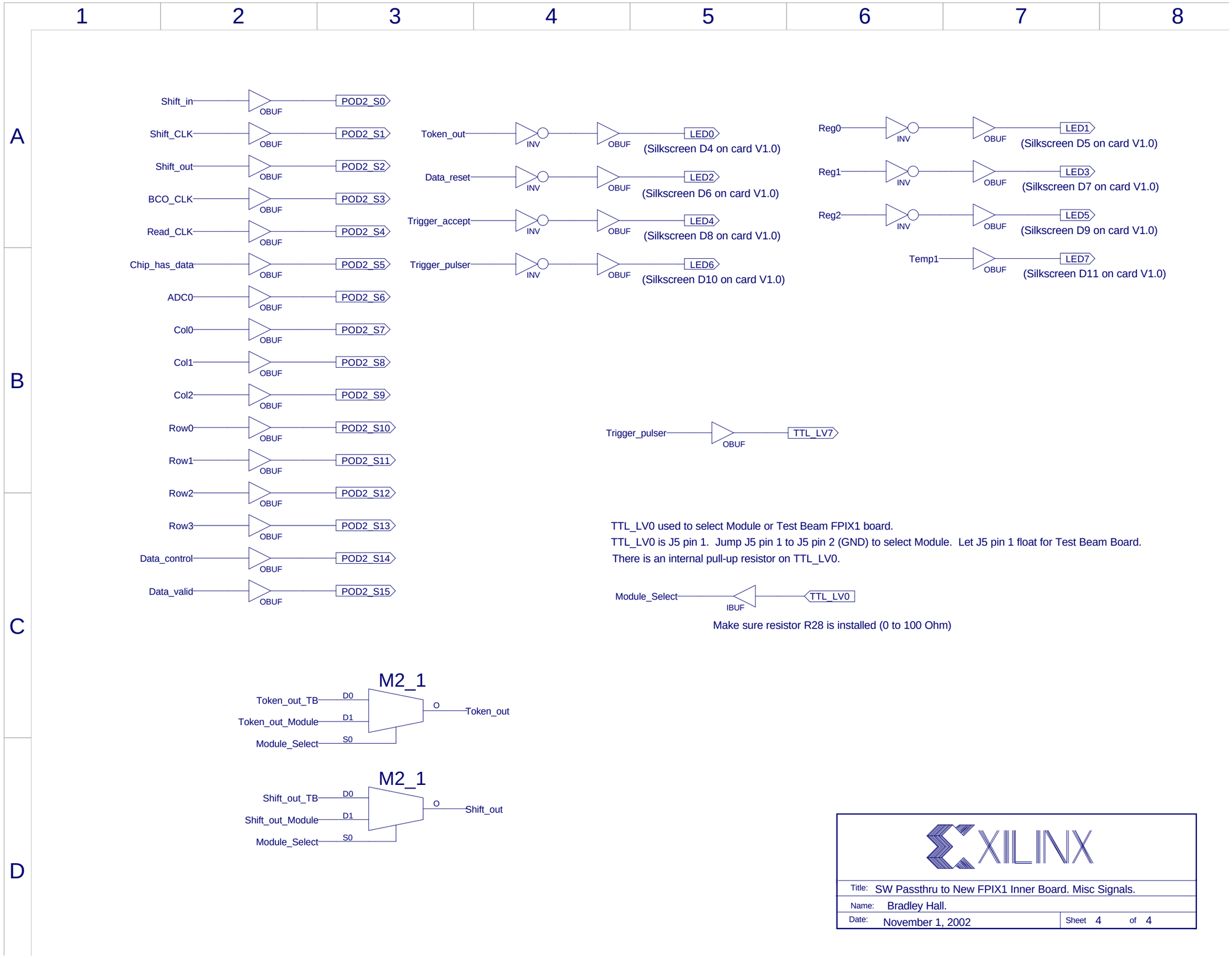
Shift_in
OBUF
POD2_S0
Shift_CLK
OBUF
POD2_S1
Shift_out
OBUF
POD2_S2
BCO_CLK
OBUF
POD2_S3
Read_CLK
OBUF
POD2_S4
Chip_has_data
OBUF
POD2_S5
ADC0
OBUF
POD2_S6
Col0
OBUF
POD2_S7
Col1
OBUF
POD2_S8
Col2
OBUF
POD2_S9
Row0
OBUF
POD2_S10
Row1
OBUF
POD2_S11
Row2
OBUF
POD2_S12
Row3
OBUF
POD2_S13
Data_control
OBUF
POD2_S14
Data_valid
OBUF
POD2_S15
Token_out
INV
OBUF
LED0
(Silkscreen D4 on card V1.0)
Data_reset
INV
OBUF
LED2
(Silkscreen D6 on card V1.0)
Trigger_accept
INV
OBUF
LED4
(Silkscreen D8 on card V1.0)
Trigger_pulser
INV
OBUF
LED6
(Silkscreen D10 on card V1.0)
Reg0
INV
OBUF
LED1
(Silkscreen D5 on card V1.0)
Reg1
INV
OBUF
LED3
(Silkscreen D7 on card V1.0)
Reg2
INV
OBUF
LED5
(Silkscreen D9 on card V1.0)
Temp1
OBUF
LED7
(Silkscreen D11 on card V1.0)
Trigger_pulser
OBUF
TTL_LV7
TTL_LV0 used to select Module or Test Beam FPIX1 board.
TTL_LV0 is J5 pin 1. Jump J5 pin 1 to J5 pin 2 (GND) to select Module. Let J5 pin 1 float for Test Beam Board.
There is an internal pull-up resistor on TTL_LV0.
Module_Select
IBUF
TTL_LV0
Make sure resistor R28 is installed (0 to 100 Ohm)
M2_1
Token_out_TB
D0
Token_out_Module
D1
Module_Select
S0
O
Token_out
M2_1
Shift_out_TB
D0
Shift_out_Module
D1
Module_Select
S0
O
Shift_out
XILINX
Title: SW Passthru to New FPIX1 Inner Board. Misc Signals.
Name: Bradley Hall.
Date: November 1, 2002
Sheet 4 of 4