DRAWING MADE IN THIRD ANGLE PROJECTION

THIS DRAWING IS UNPUBLISHED. RELEASED FOR PUBLICATION .19 .

© COPYRIGHT 19 BY AMP INCORPORATED. ALL INTERNATIONAL RIGHTS RESERVED.

LOC	DIST
BD	48

REVISIONS

P	F	ZONE	LTR	DESCRIPTION	DATE	APPD
			A	REVISED & REDRAWN ECN-2422	8-24-88	RW
			B	REVISED PER ECN BD2503	11-2-89	JW
			C	REV PER ECN BD3756	04/12/90	–
			D	REV PER EC 0020-117-93	03/17/93	SB

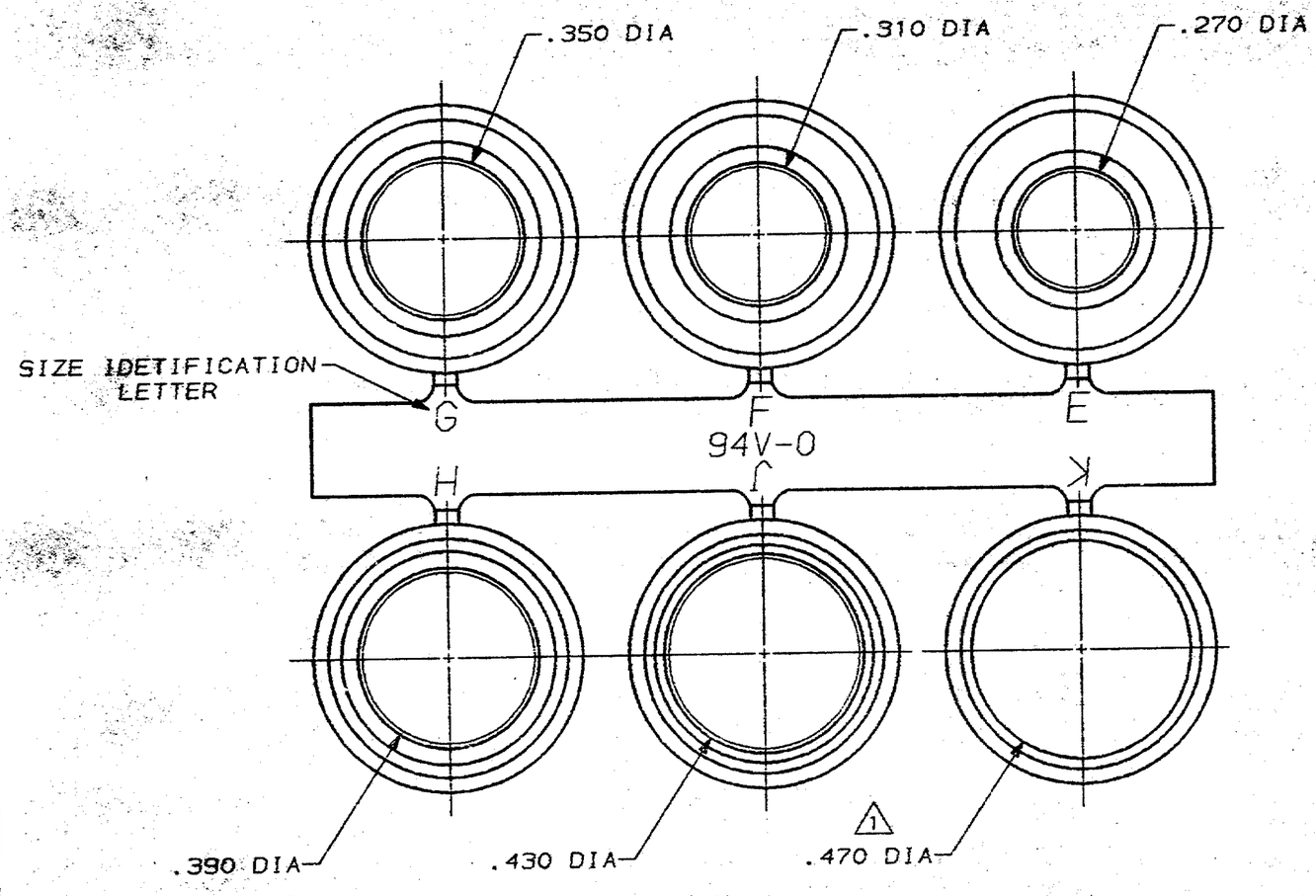

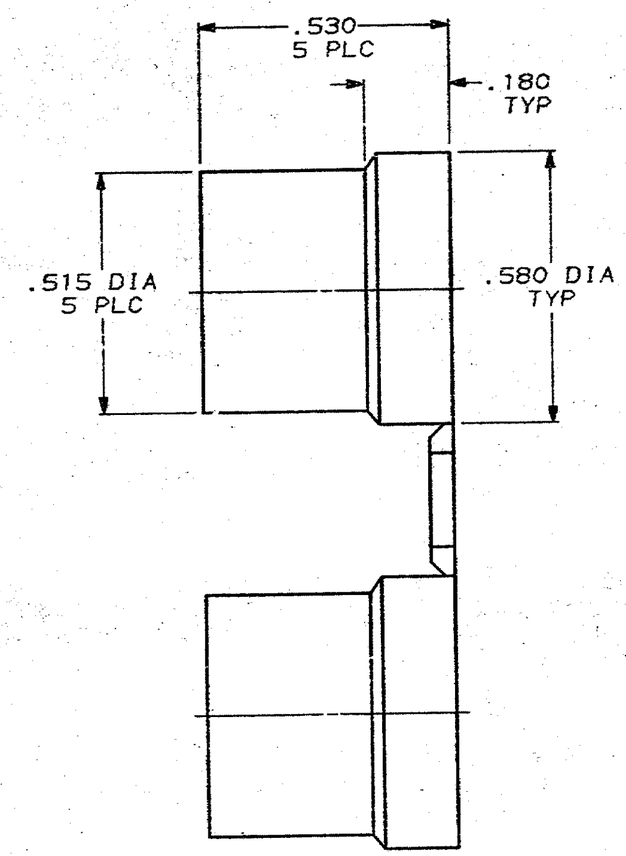

1 TOTAL HEIGHT IS .180, THIS GROMMET ONLY.

747973-1

PART NO

DO NOT SCALE PRINT. UNLESS SPECIFIED DIMENSIONS IN INCHES TOLERANCES ON : 2 PLC DEC ± – 3 PLC DEC ± .005 ANGLES ± –	DR 8-24-88 S WELDON	AMP INCORPORATED Harrisburg, Pa. 17105
	CHK 8-24-88 W LENKER	
	APPD 8-26-88 R WHYNE	NAME GROMMET ASSORTMENT, SIZE 3, 4 & 5 CABLE CLAMPS, AMPLIMITE ®
MATERIAL FLEXIBLE PVC, UL 94V-0 RATED COLOR: BLACK	APPD – –	
	PRODUCT SPEC –	
FINISH –	APPLICATION SPEC –	SIZE C / FSCM NO 00779 / DRAWING NO 747973
	WEIGHT –	SCALE 4:1 / SHEET 1 OF 1

CUSTOMER DRAWING

747973

AMP 1471-6 REV 3-87