0.50mm (.020") Pitch Board-to-Board Receptacle Housing

54363

SMT, Dual Row Vertical Stacking

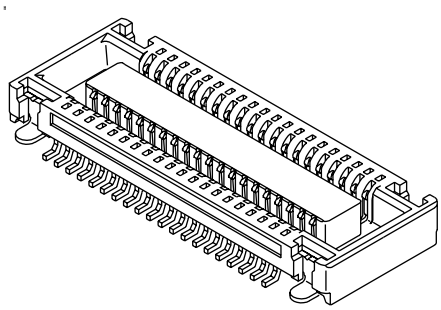

FEATURES AND SPECIFICATIONS

Features and Benefits

- Stacking height: 2.00 (.079") and 3.00mm (.118")
- Sizes 20 to 140 circuits
- Locking feature provides secure mating
- Metal solder tabs provide pcb hold-down and strain relief for SMT tails
- Durable blade on beam contact interface
- Anti-flux design

Reference Information

Packaging: Embossed
Mates With: 55201 and 55299
Designed In: Millimeters

Electrical

Voltage: 50V
Current: 0.5A*
Contact Resistance: Mate With 55201: 40mΩ max.
Mate With 55299: 50mΩ max.
Dielectric Withstanding Voltage: 125V AC/1 min.
Insulation Resistance: 100 MΩ min.

Physical

Housing: Black glass-filled LCP, UL 94V-0
Contact: Copper Alloy
Plating: Gold over Nickel
Solder tab: Copper Alloy, Tin/Lead over Copper plating
Operating Temperature: -25 to +85˚C

* Total current must not exceed 10A max.

CATALOG DRAWING (FOR REFERENCE ONLY)

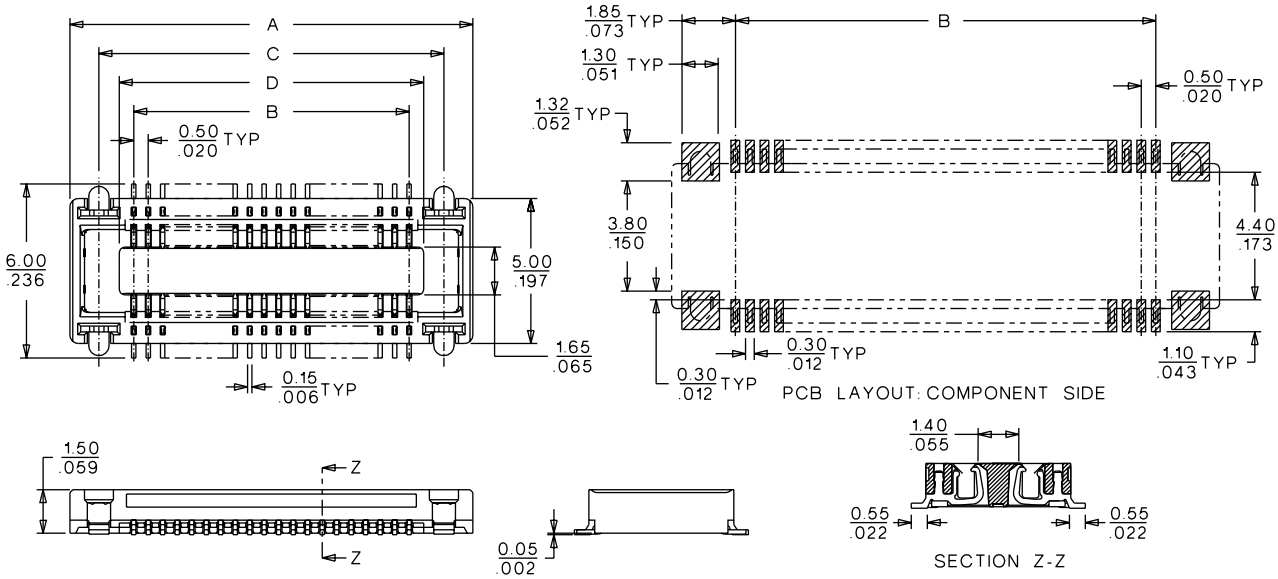

ORDERING INFORMATION AND DIMENSIONS

Circuits	Order No.	Dimension				Tape Width
		A	B	C	D	
20	54363-0208	8.90 (.350)	4.50 (.177)	6.90 (.272)	5.50 (.217)	16.00 (.630)
40	54363-0408	13.90 (.547)	9.50 (.374)	11.90 (.469)	10.50 (.413)	24.00 (.945)
80	54363-0808	23.90 (.941)	19.50 (.768)	21.90 (.862)	20.50 (.807)	44.00 (1.732)
100	54363-1008	28.90 (1.138)	24.50 (.965)	26.90 (1.059)	25.50 (1.004)	
120	54363-1208	33.90 (1.335)	29.50 (1.161)	31.90 (1.256)	30.50 (1.201)	56.00 (2.205)
140	54363-1408	38.90 (1.531)	34.50 (1.358)	36.90 (1.453)	35.50 (1.398)	