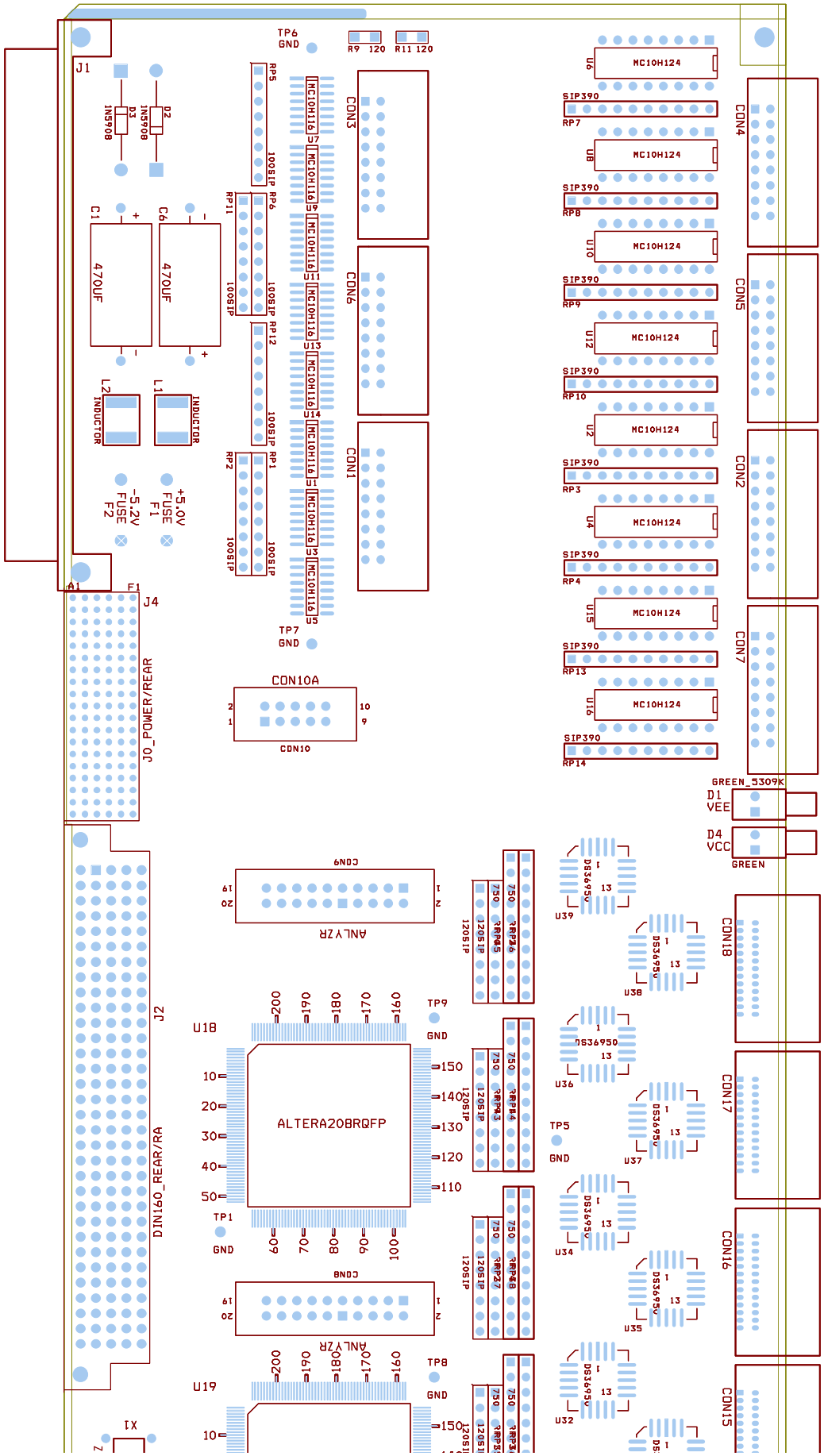

J1
TP6
GND
R9 120
R11 120
D3
1N5908
D2
1N5908
C1
470UF
C6
470UF
L2
INDUCTOR
L1
INDUCTOR
-5.2V
FUSE
F2
+5.0V
FUSE
F1
A1
F1
J4
J0_POWER/REAR
RP5
100SIP
RP6
100SIP
RP11
100SIP
RP12
100SIP
RP2
100SIP
RP1
100SIP
MC10H116
U7
U9
U11
U13
U14
U1
U3
U5
CON3
CON6
CON1
TP7
GND
CON10A
CON10
U6
U8
U10
U12
U2
U4
U15
U16
MC10H124
SIP390
RP7
RP8
RP9
RP10
RP3
RP4
RP13
RP14
CON4
CON5
CON2
CON7
GREEN_5309K
D1
VEE
D4
VCC
GREEN
CON9
ANLYZR
J2
DIN160_REAR/RA
U18
ALTERA208RQFP
TP1
GND
TP9
GND
TP5
GND
CON8
ANLYZR
U19
TP8
GND
X1
120SIP
750
DS3695v
U39
U38
U36
U37
U34
U35
U32
CON18
CON17
CON16
CON15

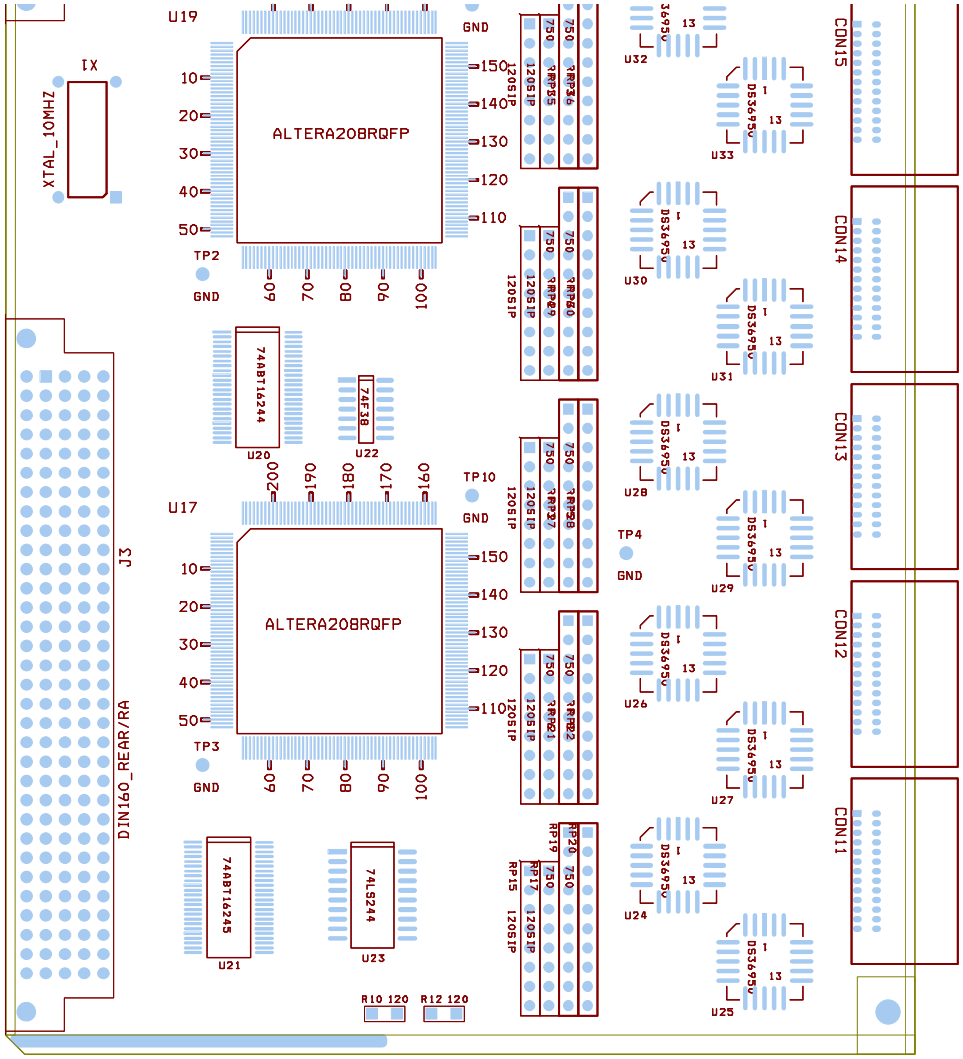

U19
ALTERA208RQFP
U17
ALTERA208RQFP
XTAL_10MHZ
IX
J3
DIN160_REAR/RA
TP2
TP3
TP4
TP10
GND
74ABT16244
74F38
74ABT16245
74LS244
U20
U22
U21
U23
U24
U25
U26
U27
U28
U29
U30
U31
U32
U33
CON11
CON12
CON13
CON14
CON15
R10 120
R12 120