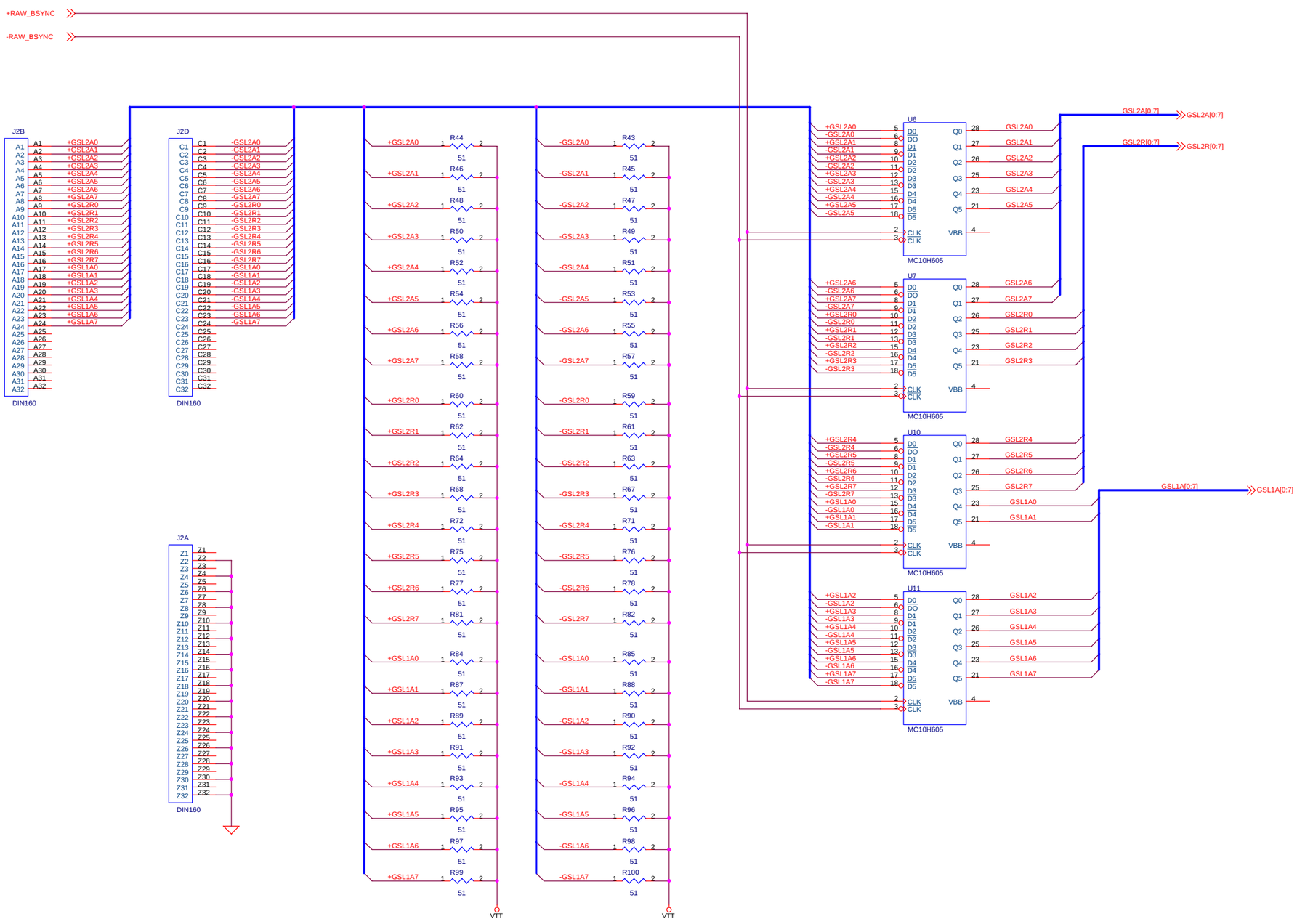


UNITED STATES DEPARTMENT OF ENERGY
FERMI NATIONAL ACCELERATOR LABORATORY

| | | |
|---|---|---|
| Title | D0 Serial Link Fanout (SLF) | |
| Size C | Document Number <Doc> | Rev 1 |
| Date: Wednesday, December 08, 1999 | Sheet 1 of 7 | |

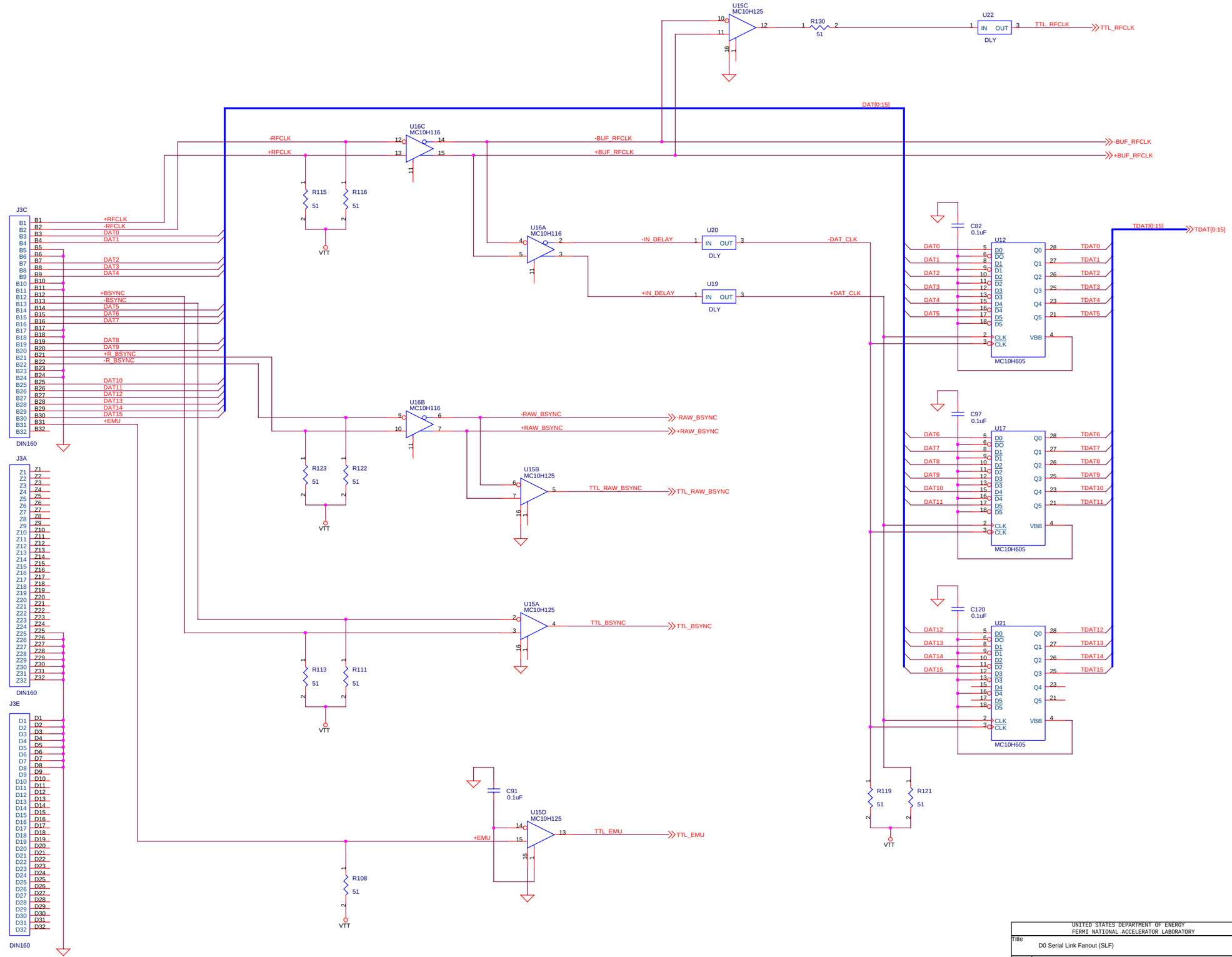


UNITED STATES DEPARTMENT OF ENERGY
FERMI NATIONAL ACCELERATOR LABORATORY

| | | |
|---|---|---|
| Title | D0 Serial Link Fanout (SLF) | |
| Size C | Document Number <Doc> | Rev 1 |
| Date: Wednesday, December 08, 1999 | Sheet 2 of 7 | |

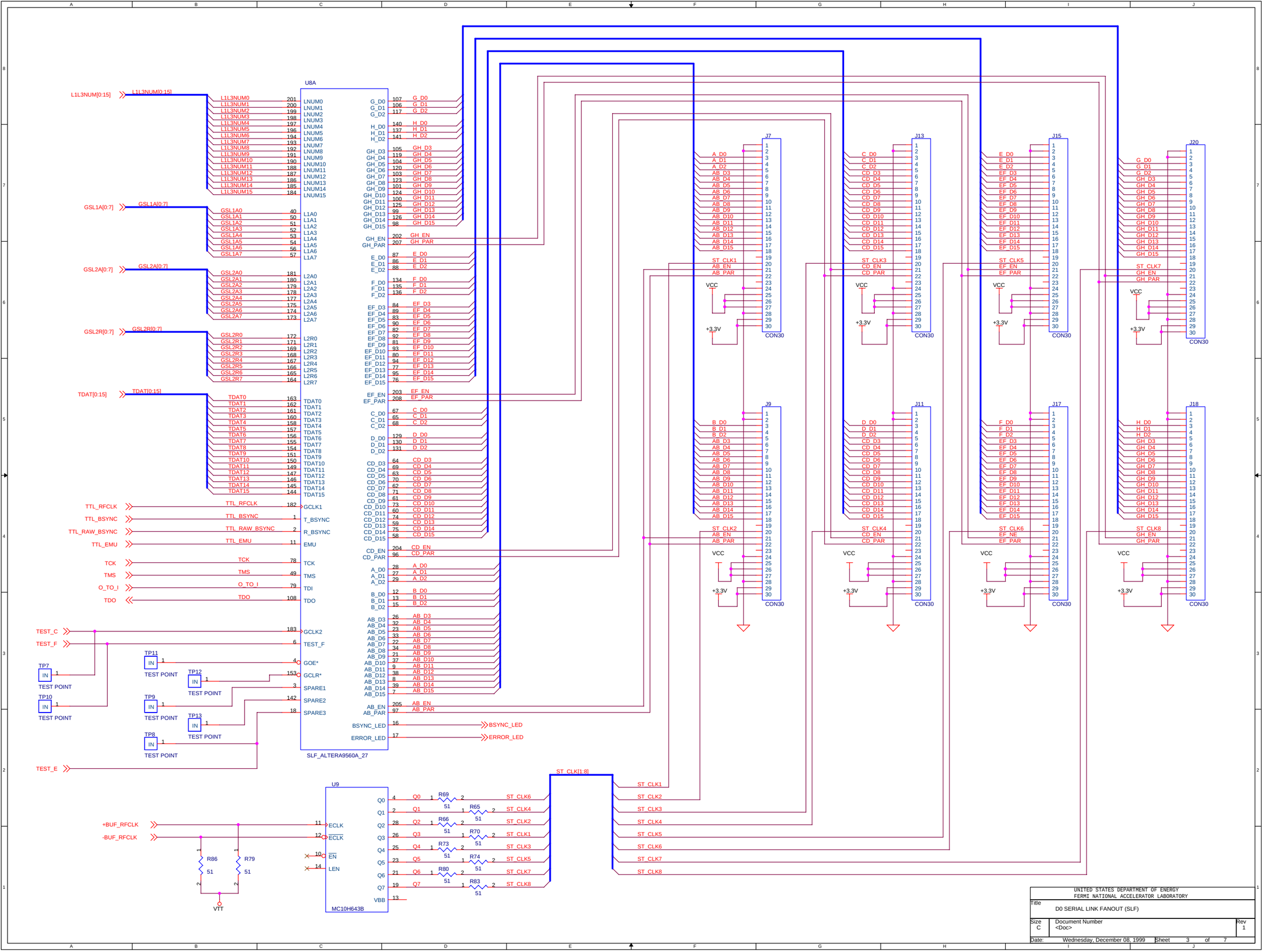


UNITED STATES DEPARTMENT OF ENERGY
FERMI NATIONAL ACCELERATOR LABORATORY

Title: D0 SERIAL LINK FANOUT (SLF)

Size: C | Document Number: <Doc> | Rev: 1

Date: Wednesday, December 08, 1999 | Sheet 3 of 7

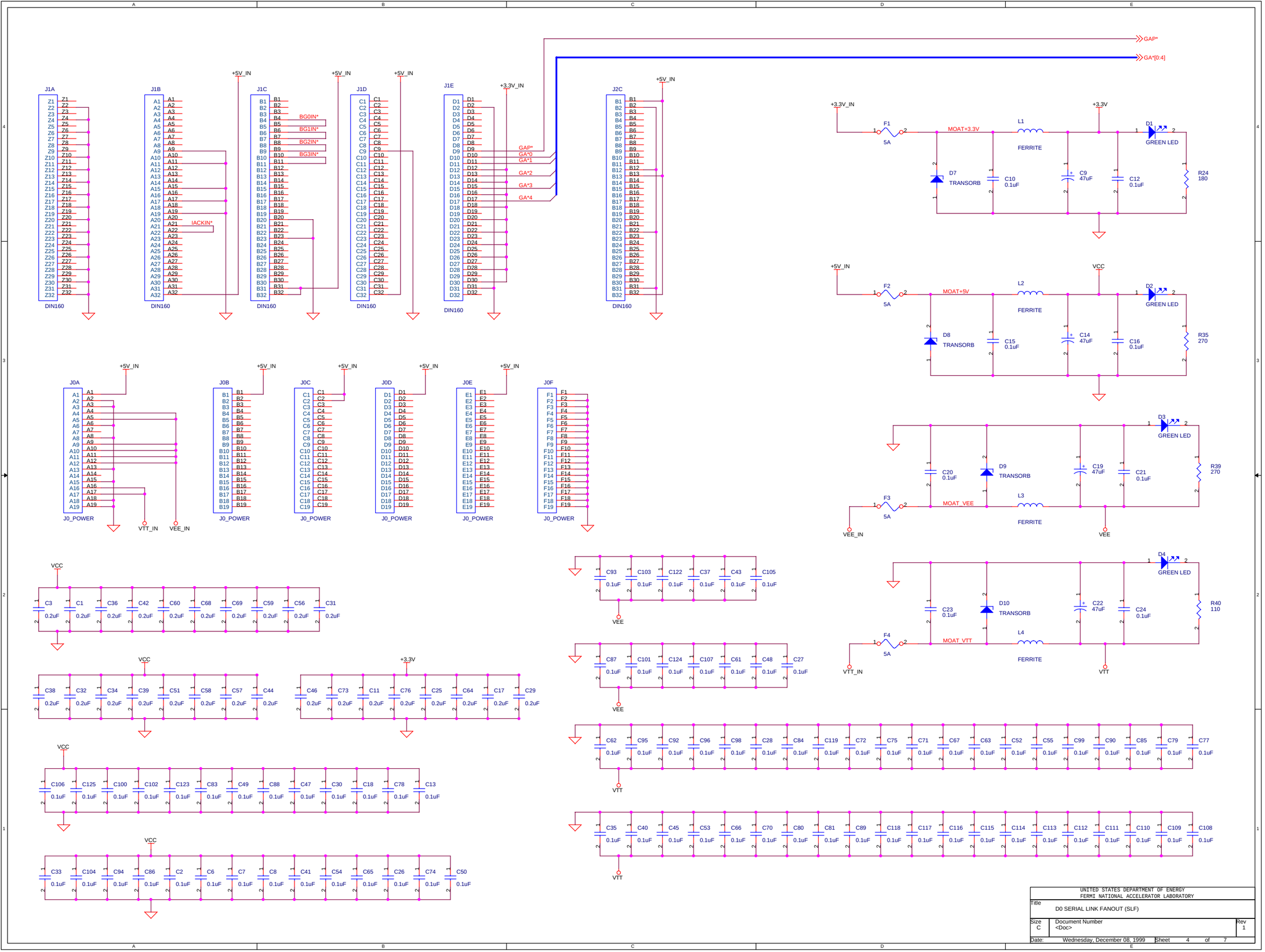
GAP*
GA*[0:4]
J1A
J1B
J1C
J1D
J1E
J2C
DIN160
+5V_IN
+3.3V_IN
BG0IN*
BG1IN*
BG2IN*
BG3IN*
IACKIN*
GAP*
GA*0
GA*1
GA*2
GA*3
GA*4
J0A
J0B
J0C
J0D
J0E
J0F
J0_POWER
VTT_IN
VEE_IN
F1
5A
MOAT+3.3V
L1
FERRITE
+3.3V
D1
GREEN LED
D7
TRANSORB
C10
0.1uF
C9
47uF
C12
0.1uF
R24
180
F2
MOAT+5V
VCC
L2
D2
D8
C15
C14
C16
R35
270
D3
D9
C20
C19
C21
R39
F3
MOAT_VEE
L3
VEE
D4
D10
C23
C22
C24
R40
110
F4
MOAT_VTT
L4
VTT
C3
C1
C36
C42
C60
C68
C69
C59
C56
C31
0.2uF
C38
C32
C34
C39
C51
C58
C57
C44
C46
C73
C11
C76
C25
C64
C17
C29
C106
C125
C100
C102
C123
C83
C49
C88
C47
C30
C18
C78
C13
C33
C104
C94
C86
C2
C6
C7
C8
C41
C54
C65
C26
C74
C50
C93
C103
C122
C37
C43
C105
C87
C101
C124
C107
C61
C48
C27
C62
C95
C92
C96
C98
C28
C84
C119
C72
C75
C71
C67
C63
C52
C55
C99
C90
C85
C79
C77
C35
C40
C45
C53
C66
C70
C80
C81
C89
C118
C117
C116
C115
C114
C113
C112
C111
C110
C109
C108
UNITED STATES DEPARTMENT OF ENERGY
FERMI NATIONAL ACCELERATOR LABORATORY
Title
D0 SERIAL LINK FANOUT (SLF)
Size
C
Document Number
<Doc>
Rev
1
Date: Wednesday, December 08, 1999
Sheet 4 of 7

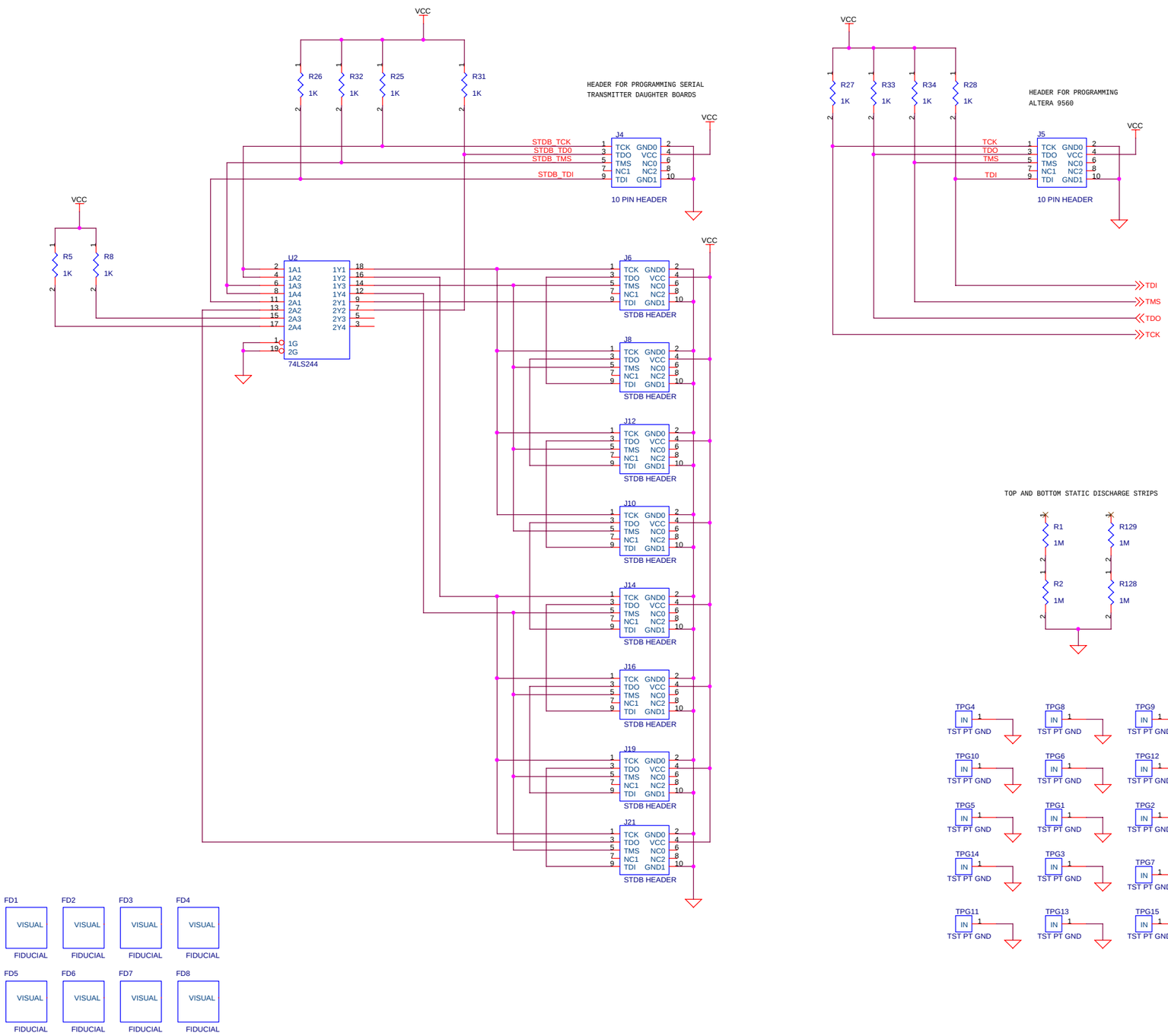








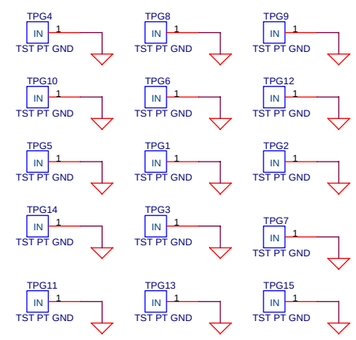


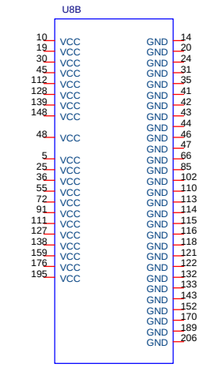


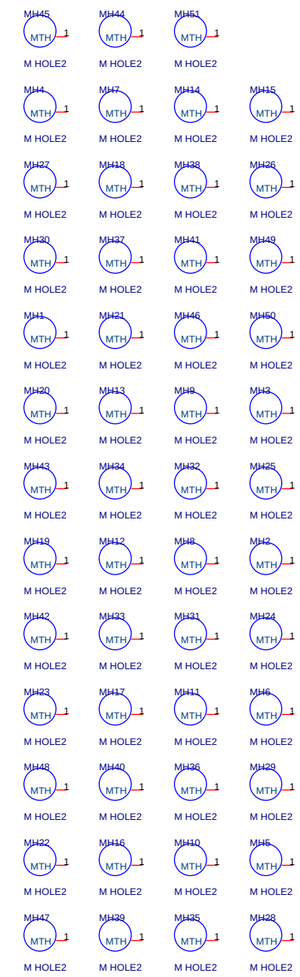


UNITED STATES DEPARTMENT OF ENERGY
FERMI NATIONAL ACCELERATOR LABORATORY

| | | |
|---|---|---|
| Title | D0 SERIAL LINK FANOUT (SLF) | |
| Size C | Document Number <Doc> | Rev 1 |
| Date: Wednesday, December 08, 1999 | Sheet 5 of 7 | |

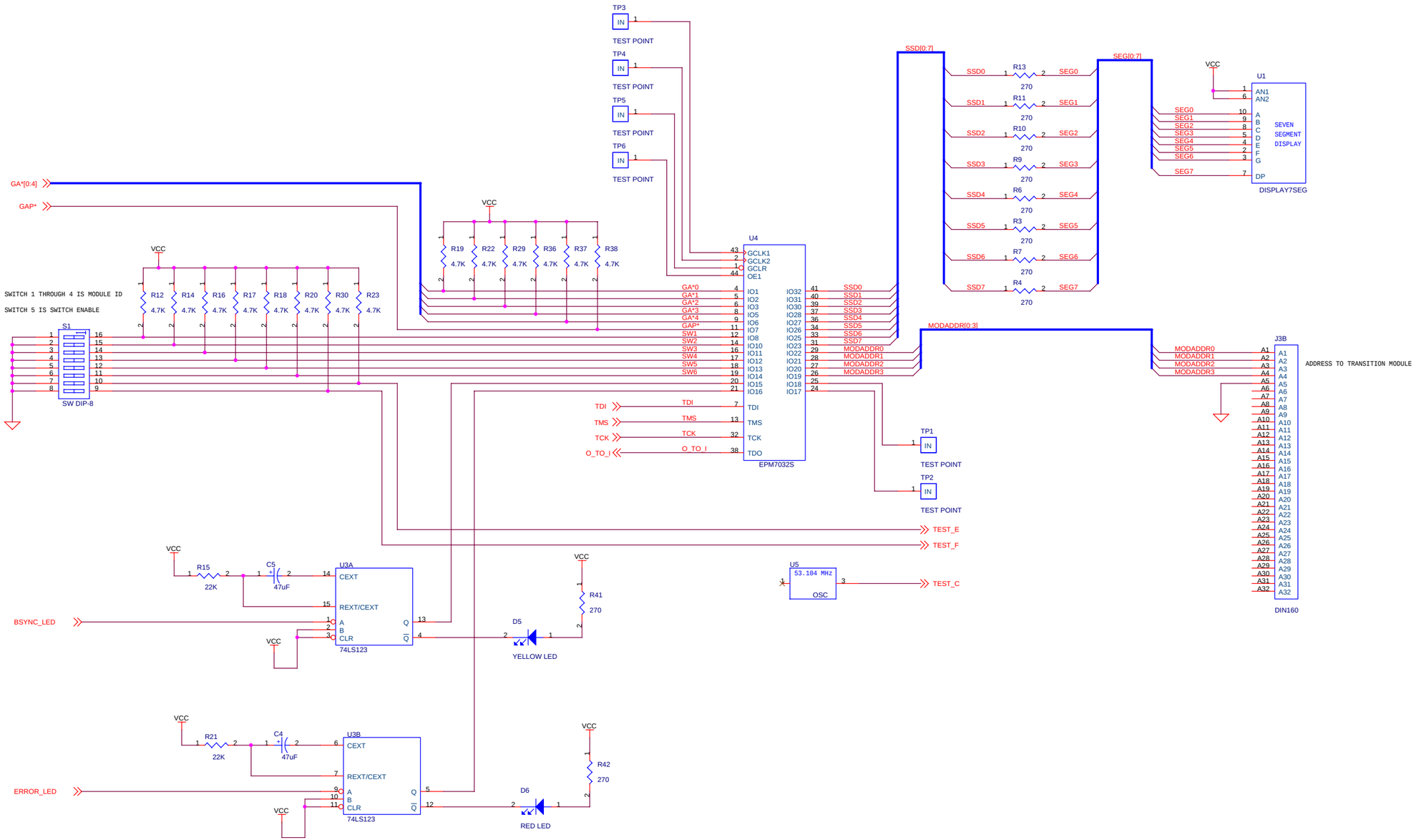


UNITED STATES DEPARTMENT OF ENERGY
FERMI NATIONAL ACCELERATOR LABORATORY

| | | |
|---|---|---|
| Title | D0 Serial Link Fanout (SLF) | |
| Size C | Document Number <Doc> | Rev 1 |
| Date: Wednesday, December 08, 1999 | Sheet 6 of 7 | |

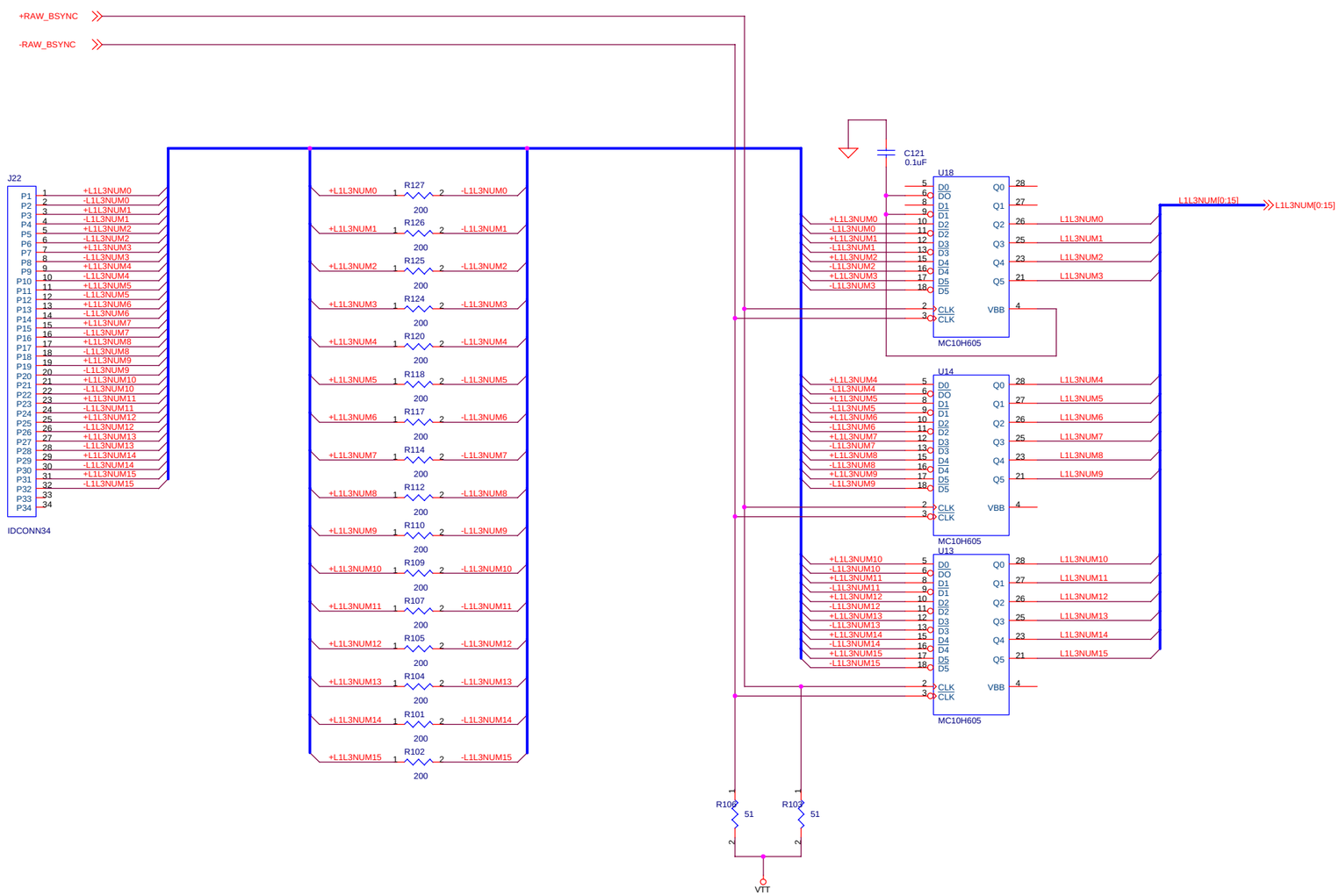


UNITED STATES DEPARTMENT OF ENERGY
FERMI NATIONAL ACCELERATOR LABORATORY

Title: D0 Serial Link Fanout (SLF)

| Size | Document Number | Rev |
|---|---|---|
| C | <Doc> | 1 |

Date: Wednesday, December 08, 1999 Sheet 7 of 7