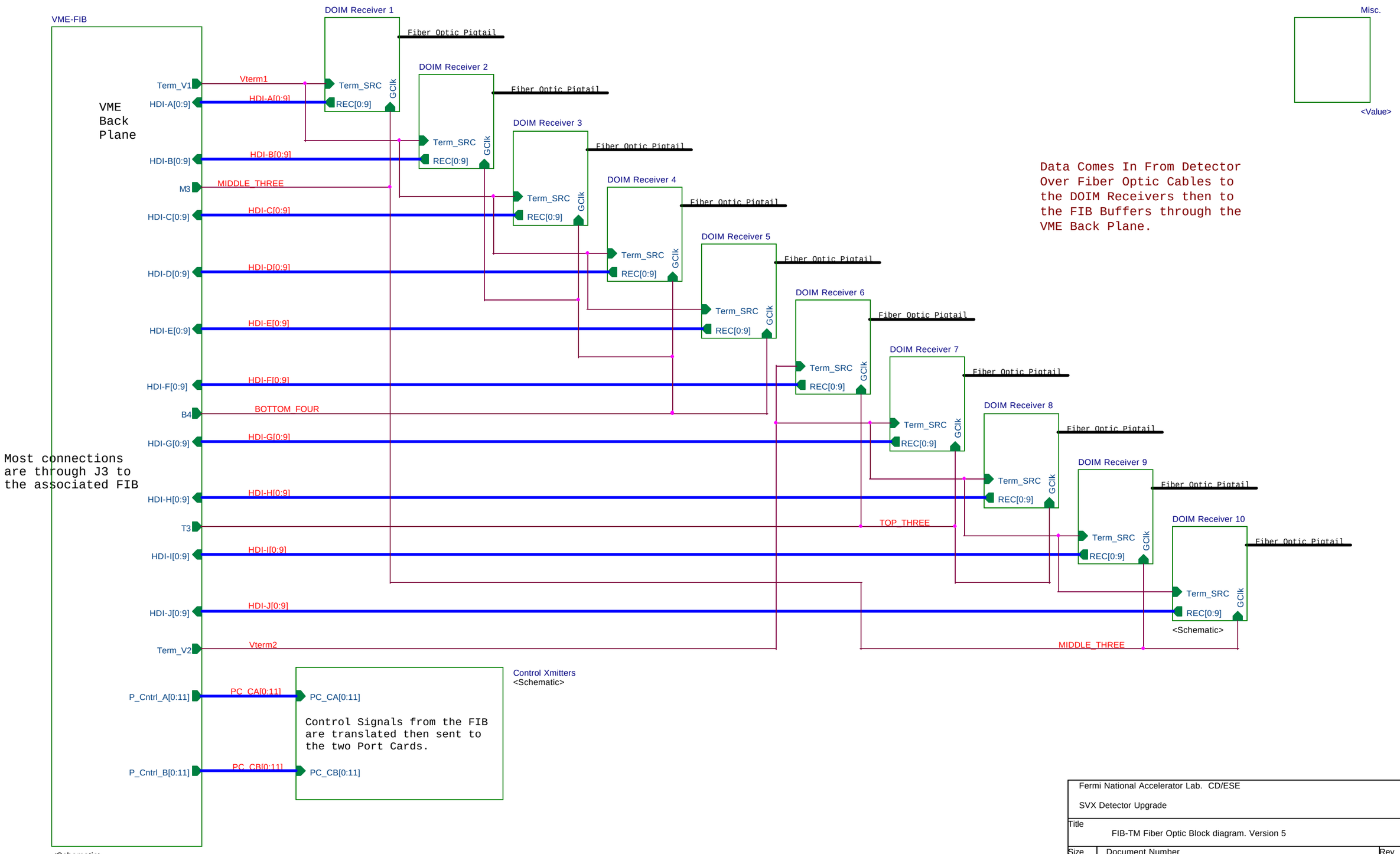

Fermi National Accelerator Lab. CD/ESE

SVX Detector Upgrade

Title: FIB-TM Fiber Optic Block diagram. Version 5

Size	Document Number	Rev
B	FIB - TM - FO - 5 - 1	5.1

Date: Tuesday, August 31, 1999 Sheet 1 of 16

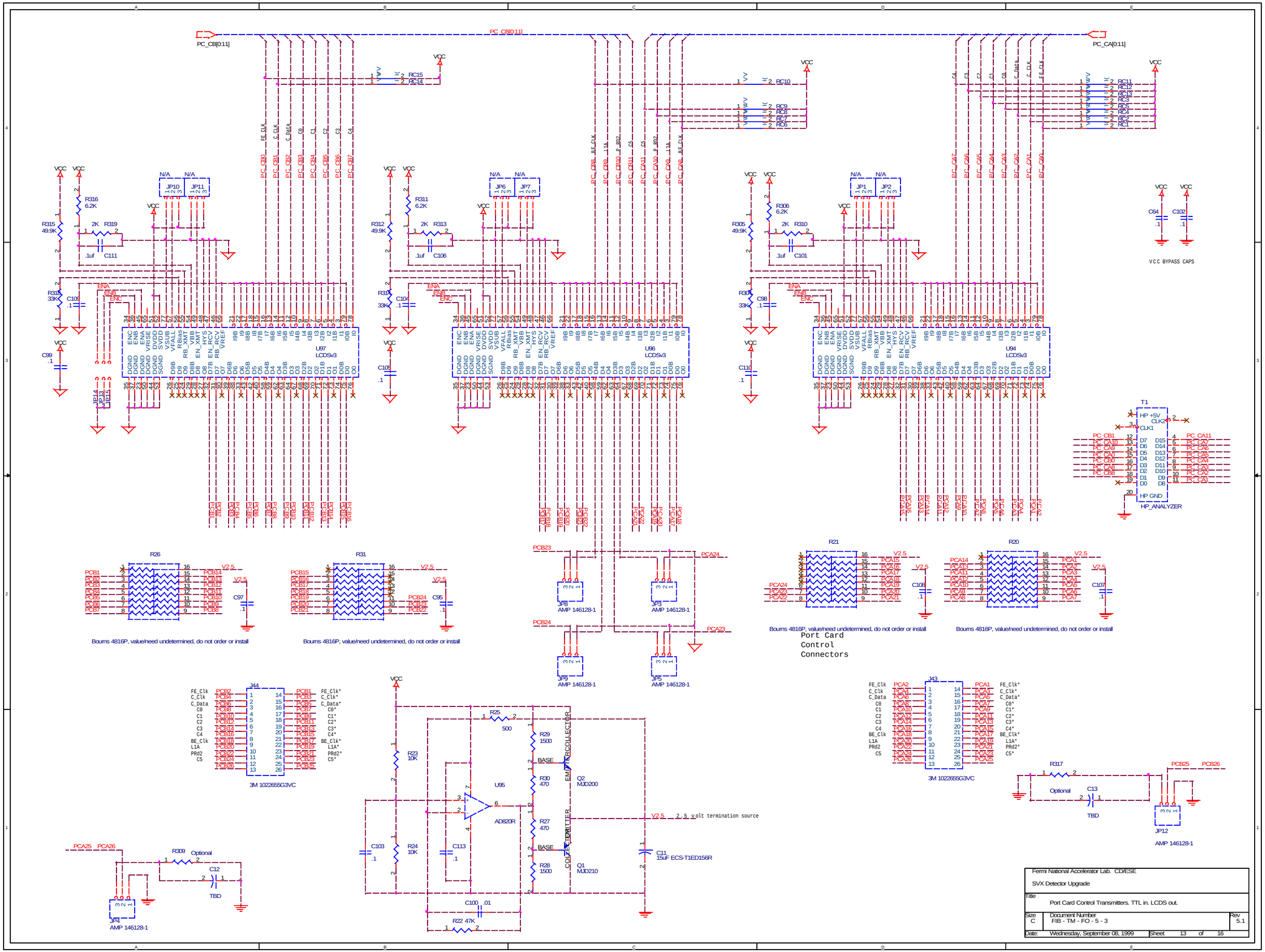

Fermi National Accelerator Lab. CD/ESE

SVX Detector Upgrade

Title: Port Card Control Transmitters. TTL in. LCDS out.

Size	Document Number	Rev
C	FIB - TM - FO - 5 - 3	5.1

Date: Wednesday, September 08, 1999 Sheet 13 of 16

The DOIM outputs swing approximately 1.2 volts up from 3.0 volts. Terminating at 3.0 volts uses the least quiesient power.

DOIM outputs: Q0 is Data bit 7 and Q7 is data bit 0. Q4 also becomes "Bottom Neighbor." DOIM Q8 goes to the delay line circuitry and becomes OBDV (Odd Byte Data Valid.)

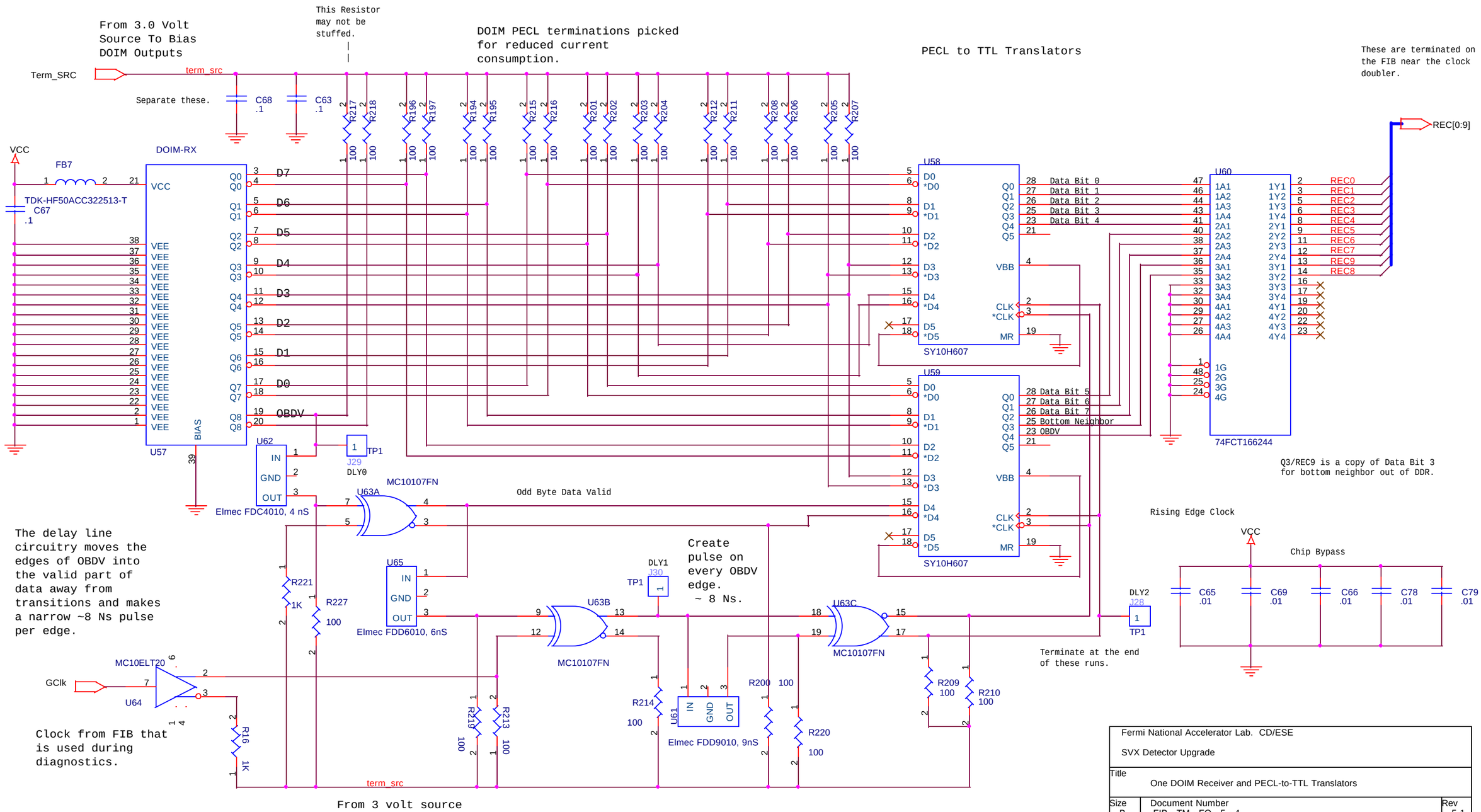

Fermi National Accelerator Lab. CD/ESE	
SVX Detector Upgrade	
Title: One DOIM Receiver and PECL-to-TTL Translators	
Size: B	Document Number: FIB - TM - FO - 5 - 4 — Rev: 5.1
Date: Wednesday, July 12, 2000	Sheet 12 of 16

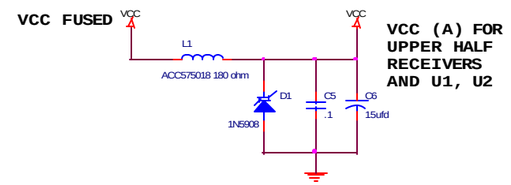

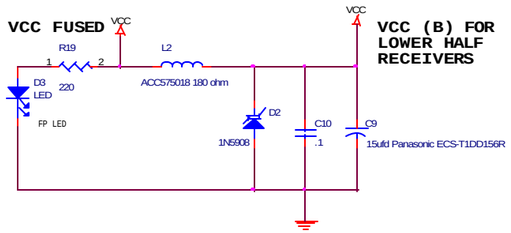

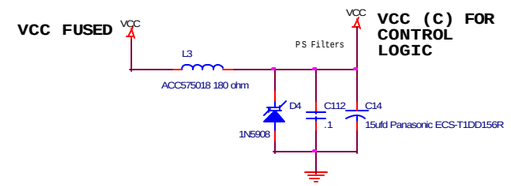

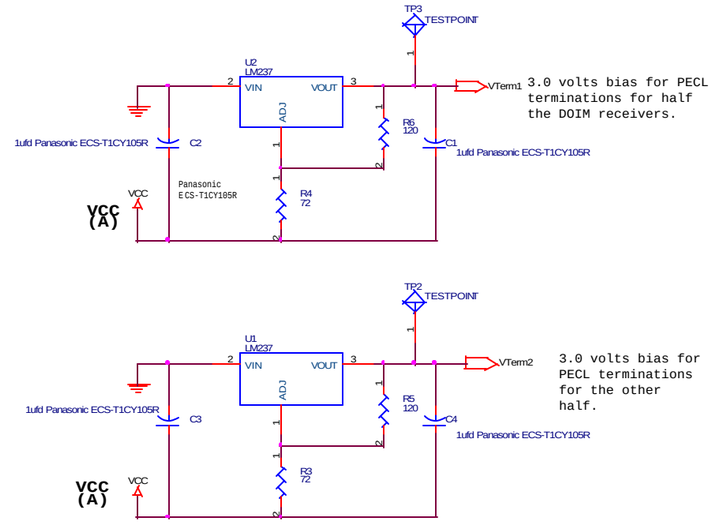

The 3 volt references are negetive regulators so that they sink current rather than sourcing it. These devices require a small heat sink. They may dissipate almost 3 watts each.

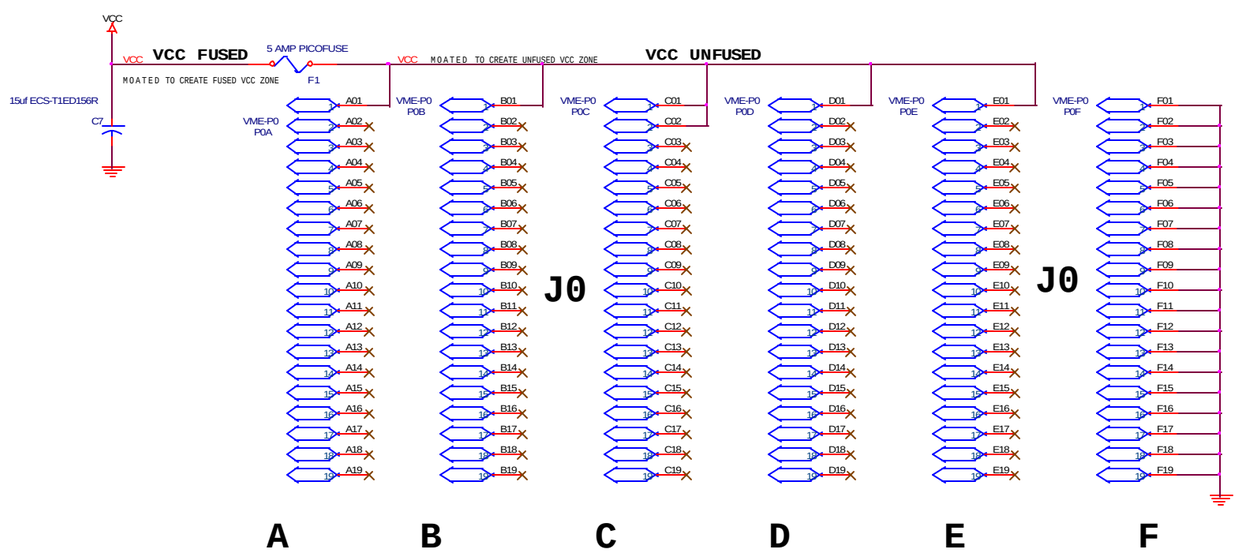

Vince Pavlicek & Jim Franzen CD/OLS	
SVX Detector Upgrade	
Title: FIB_TM_FO The Bias for the DOIMS and the J0 connections	
Size: C	Document Number: FIB - TM - FO - 4 - 6	Rev: 4.1
Date: Tuesday, August 31, 1999	Sheet 16 of 16

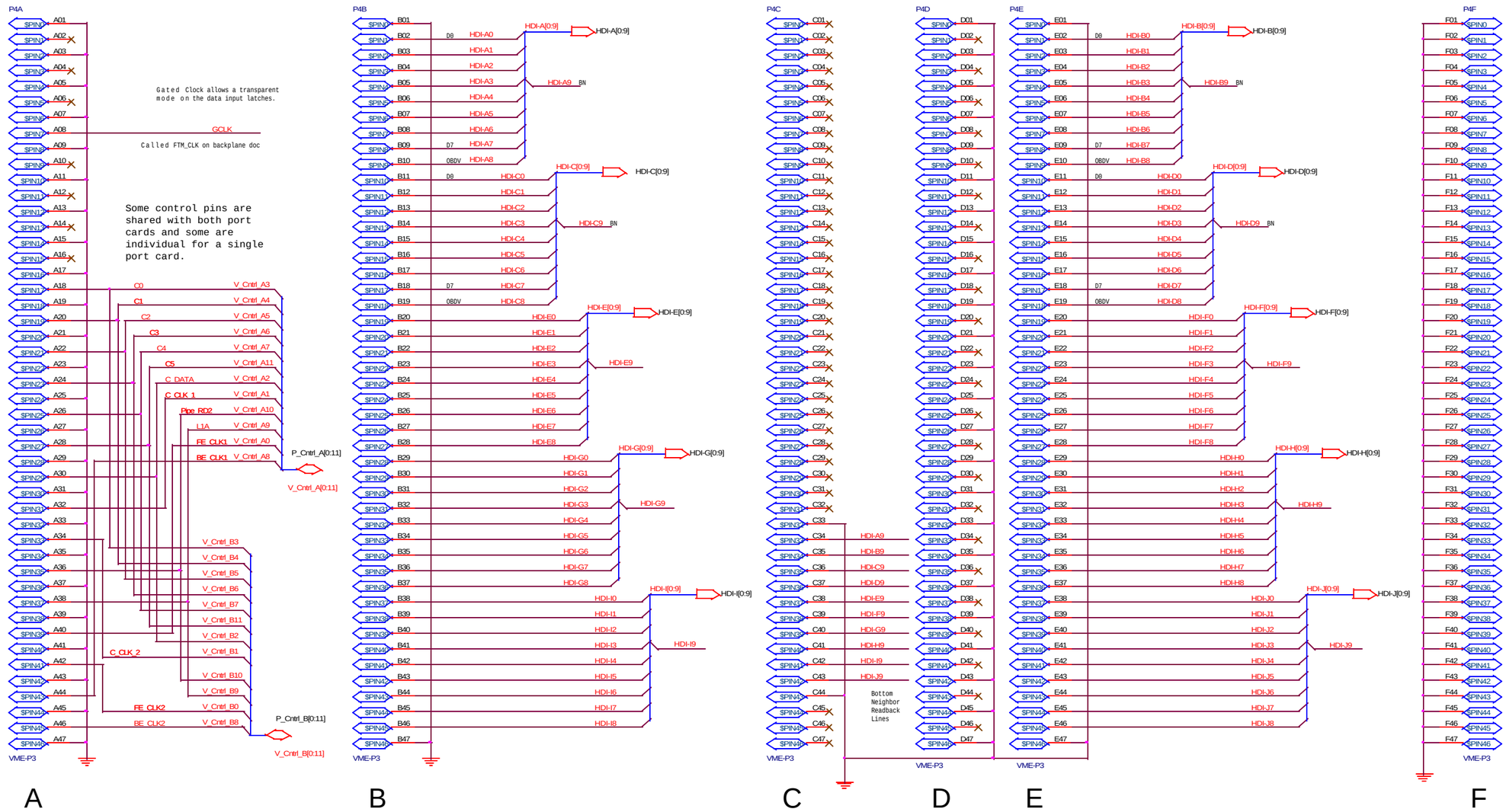

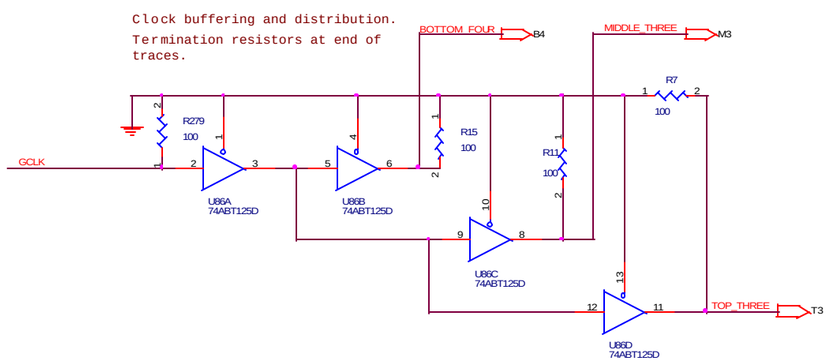

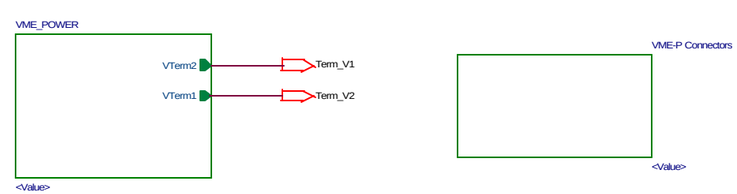

Five of these 47 Pin columns make up the P3 connector to the VME-P J3 back plane connector.

Fermi National Accelerator Lab Vince Pavlicek & Jim Franzen CD/OLS

SVX Detector Upgrade

Title: FIB-TM-FO Back Plane Connections

Size: C | Document Number: FIB - TM - FO - 5 - 7 | Rev: 5.1

Date: Tuesday, August 31, 1999 | Sheet 7 of 16

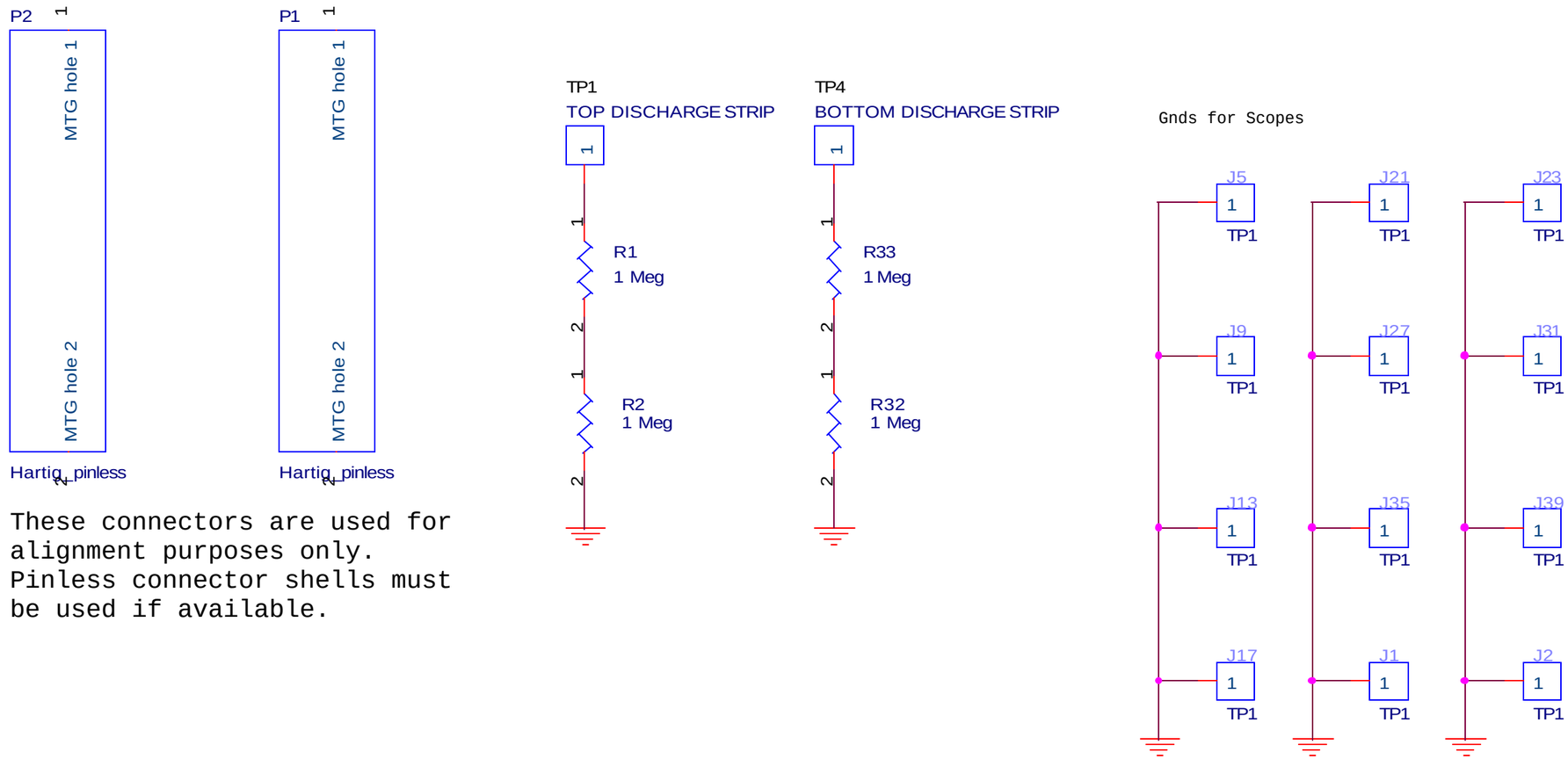

These connectors are used for alignment purposes only. Pinless connector shells must be used if available.

Fermi National Accelerator Lab. CD/ESE SVX Detector Upgrade		
Title VME-P Connectors, ESD strips and TPs.		
Size A	Document Number FIB - TM - FO - 5 - 5	Rev 5.1
Date: Tuesday, August 31, 1999	Sheet 4 of 16	

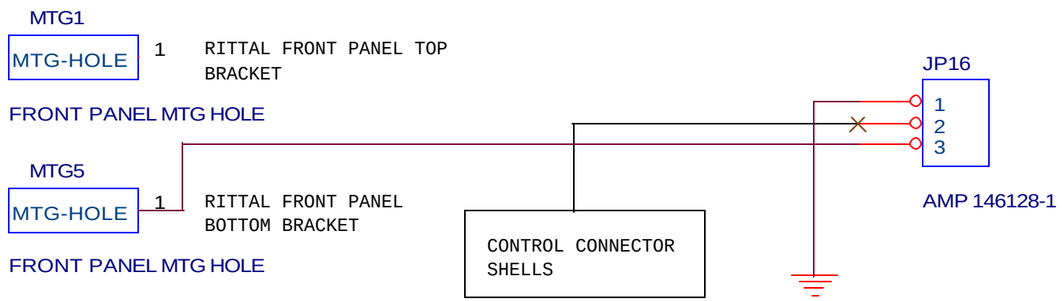

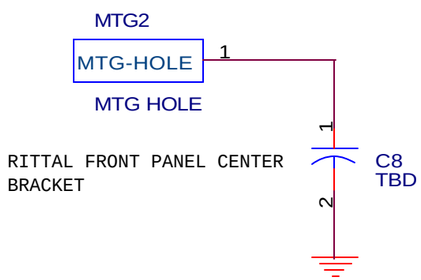

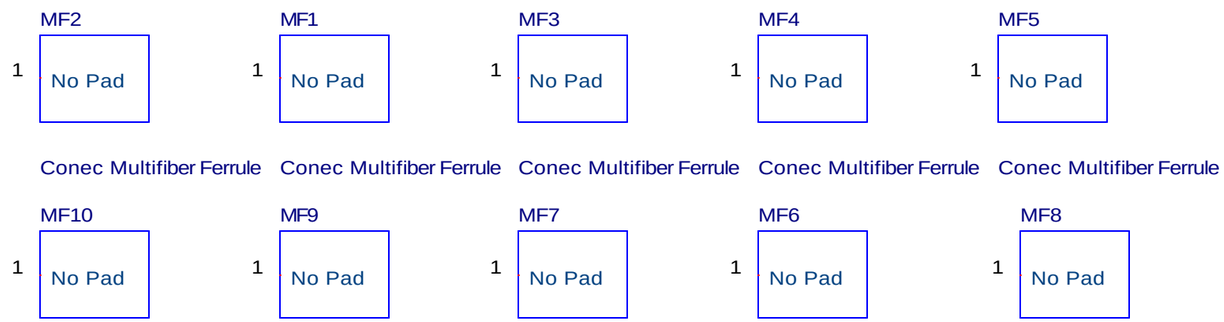

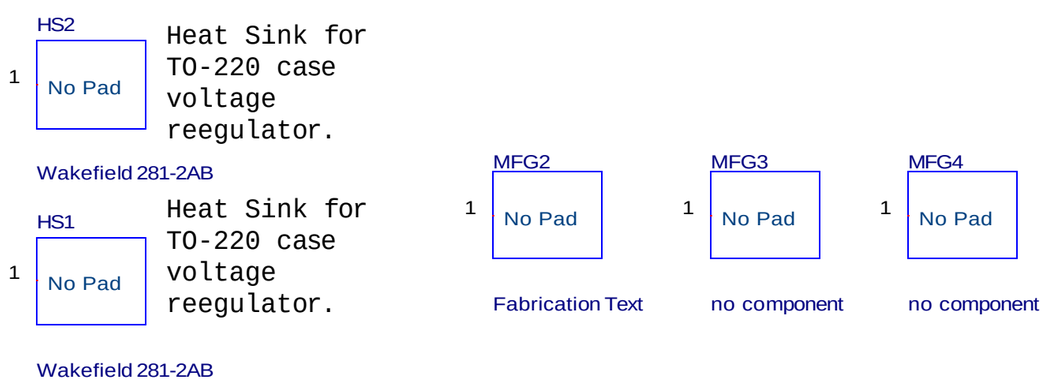

Title	Misc devices for Layout.	
Size A	Document Number FIB - TM - FO - 5 - 2	Rev 5.1
Date: Thursday, September 09, 1999	Sheet 6 of 16	
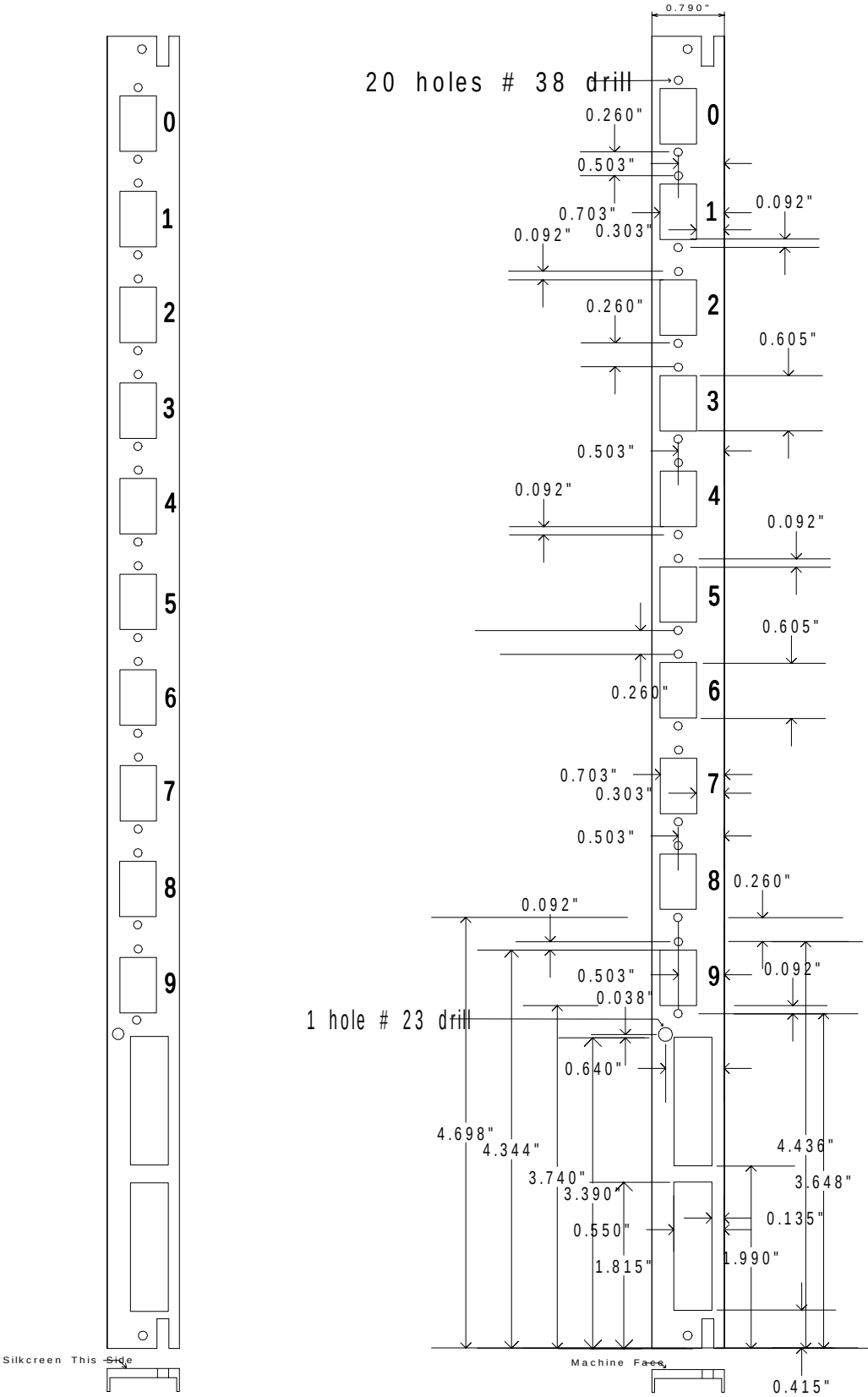
FIB_FIBER_TM FRONT PANEL