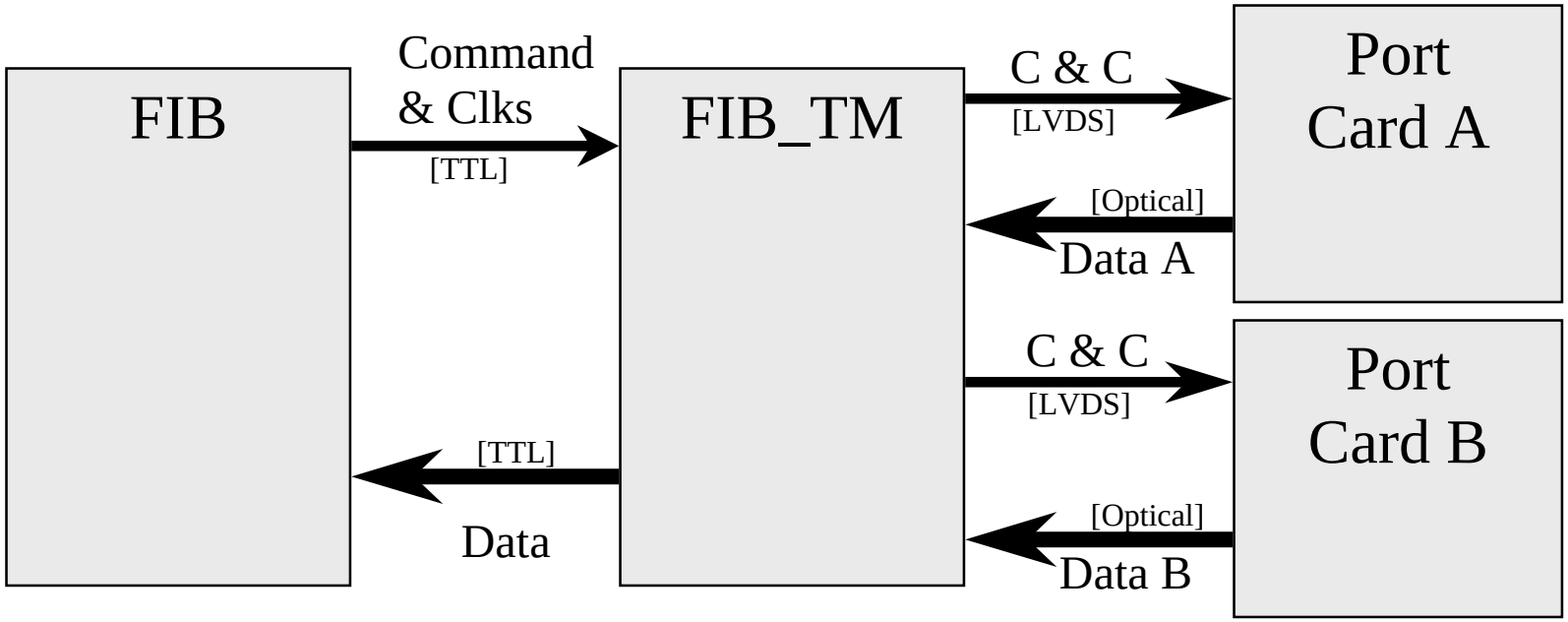
FIB
Command
& Clks
[TTL]
FIB_TM
C & C
[LVDS]
Port
Card A
[Optical]
Data A
C & C
[LVDS]
Port
Card B
[TTL]
Data
[Optical]
Data B