Date: 3/19/2003 Time : 02:09:26 PM

PART NO.	A8655-001	REV	ECO	DATE	APP
		2		03-04-03	

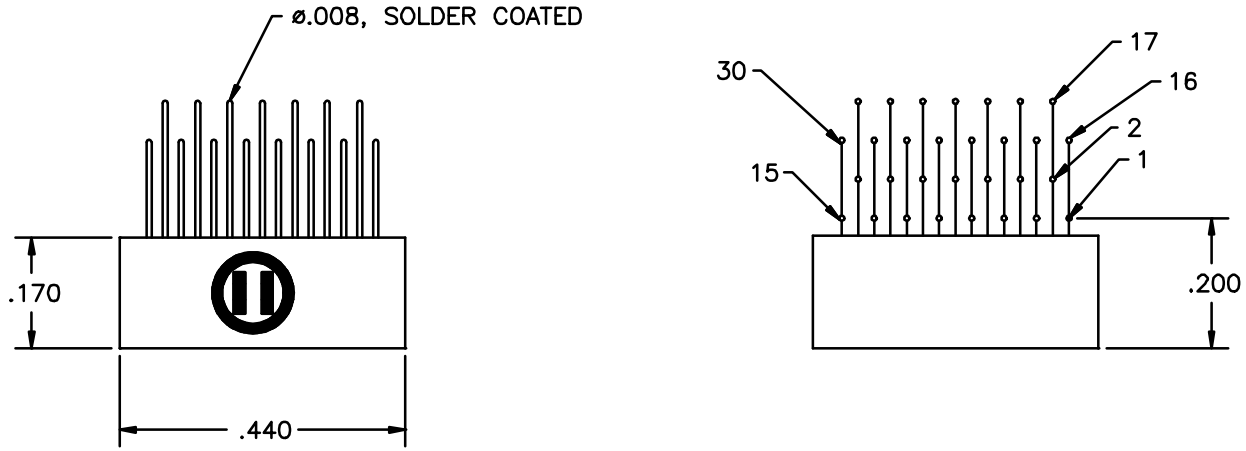

Drawing Approval

Date

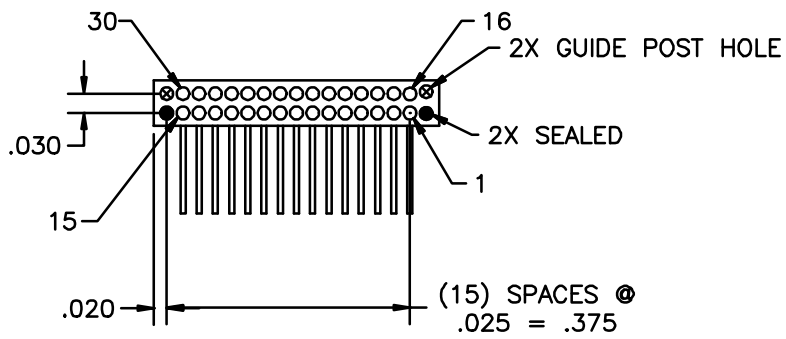

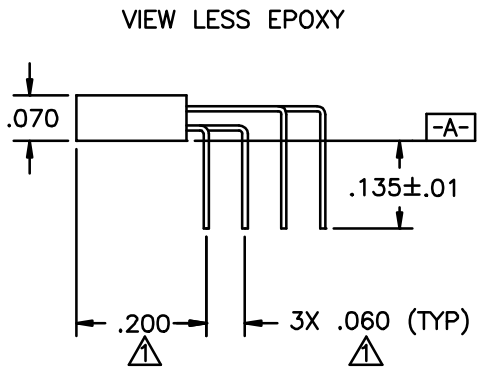

REF: FERMI LABS

1 TAIL DIMENSIONS APPLY AT PLANE -A-

NPD	-TOLERANCES- UNLESS OTHERWISE NOTED DIMENSIONS IN INCHES 2 PL DEC ± .01 3 PL DEC ± .005 4 PL DEC ± .0005 ANGLES ±	OMNETICS CONNECTOR CORPORATION		CAGE CODE 61873
		DFTM. SKP	DATE 02-19-03	DWG NO. A8655
		CHK'D.	DATE	SHEET 1 OF 1 / REV 2
		APP'D.	DATE	SCALE: 5:1

TITLE: (30) PIN MALE NANO DUAL ROW W/GUIDE POST HOLES

Title: \\Misc server\!!eng server\A-Num\A86-a87\A8655.dwg