Date: 3/19/2003 Time : 02:09:12 PM

PART NO.	A8654-001	REV	ECO	DATE	APP
		2		02-28-03	

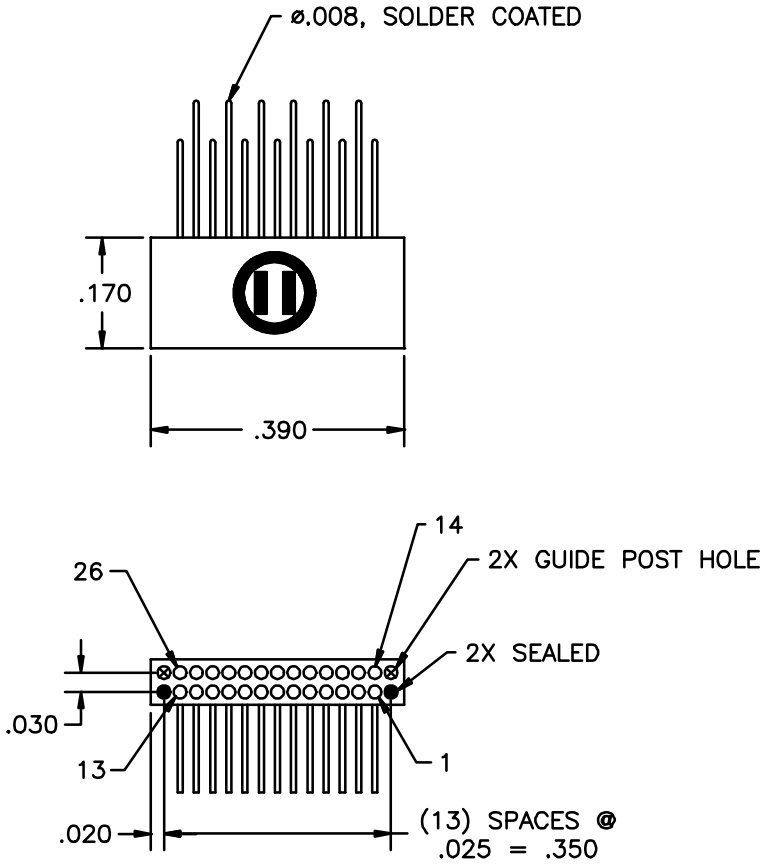

Drawing Approval

Date

REF: FERMI LABS

△1 TAIL DIMENSIONS APPLY AT PLANE -A-

NPD	-TOLERANCES- UNLESS OTHERWISE NOTED DIMENSIONS IN INCHES 2 PL DEC ± .01 3 PL DEC ± .005 4 PL DEC ± .0005 ANGLES ±	OMNETICS CONNECTOR CORPORATION		CAGE CODE 61873
		DFTM. SKP	DATE 02-19-03	TITLE: (26) PIN MALE NANO DUAL ROW W/GUIDE POST HOLES	DWG NO. A8654
		CHK'D.	DATE		SHEET 1 OF 1 / REV 2
		APP'D.	DATE		SCALE: 5:1

Title: \\Misc server\!!eng server\A-Num\A86-a87\A8654.dwg