JPC

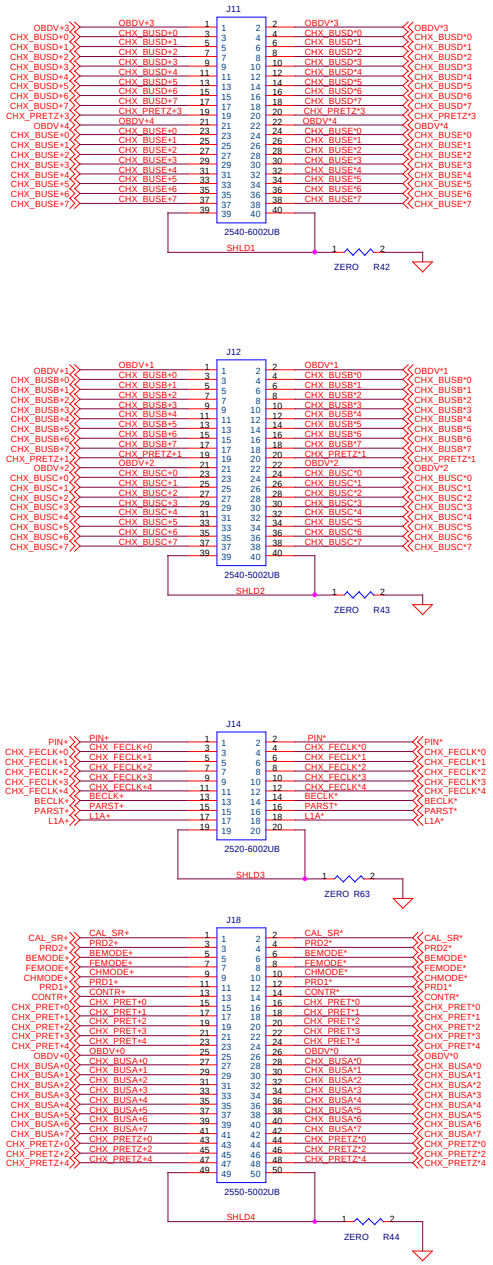

PMC

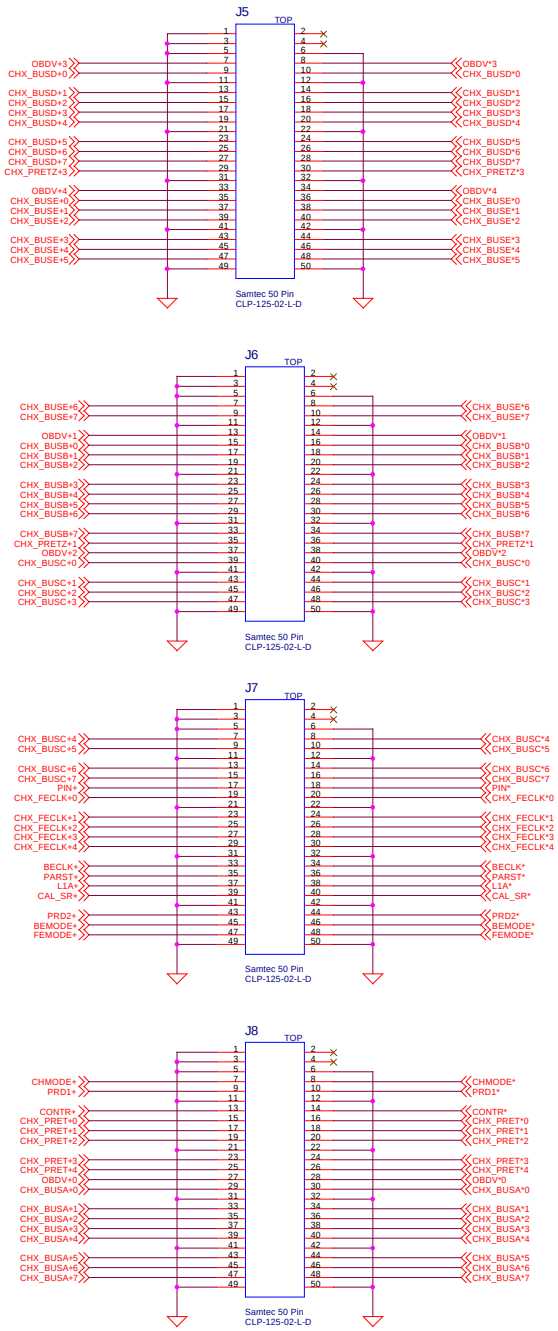

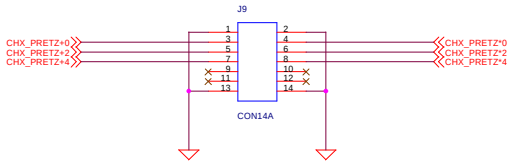

M1 M2 M3
MOIRE MOIRE MOIRE

MT1 MT2 MT3 MT4

Guilherme Cardoso	
Title: FTM_ADAPT_5_STAVES	
Size: Custom	Document Number: <Doc>
Fermi National Accelerator Laboratory	Rev: 1.0
Date: Friday, October 03, 2003	Sheet 1 of 1