PART NO.	A8301-001	REV	ECO	DATE	APP

ALL DIMENSIONS APPLY TO
BOTH CONNECTORS

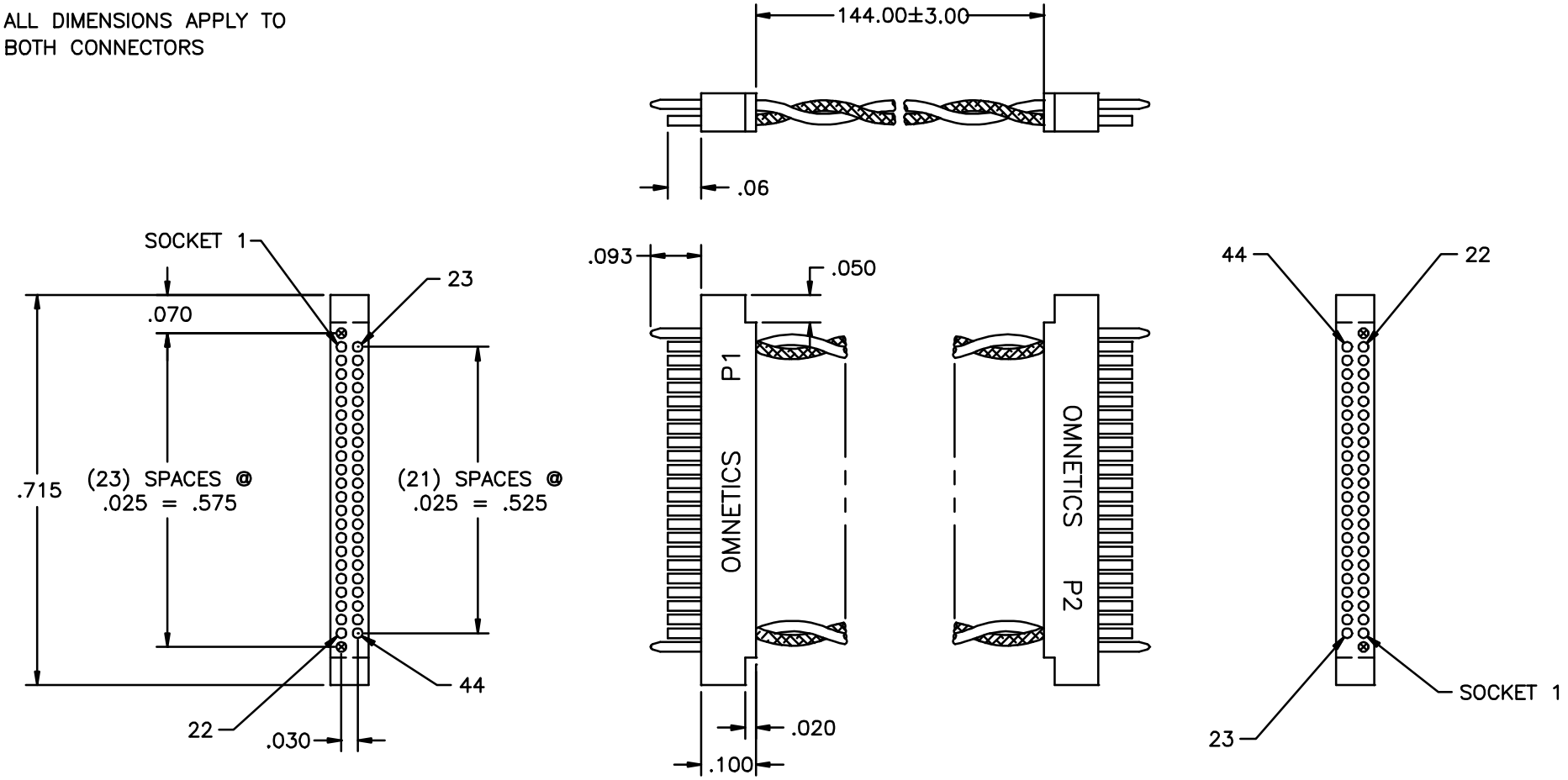

WIRE:
34 AWG (16-46)
NEW ENGLAND PN N13-46T-250
CUSTOMER SUPPLIED

REF: FERMI LABS

JUM	-TOLERANCES- UNLESS OTHERWISE NOTED DIMENSIONS IN INCHES 2 PL DEC ± .01 3 PL DEC ± .005 4 PL DEC ± .0005 ANGLES ±	OMNETICS CONNECTOR CORPORATION		CAGE CODE 61873
		DFTM. SKP	DATE 04-01-02	DWG NO. A8301
		CHK'D.	DATE	SHEET 1 OF 2 / REV 1
		APP'D.	DATE	SCALE: 5:1

TITLE:
(44) LINE FEMALE
DUAL ROW NANO JUMPER
W/GUIDE POSTS