MI BPM Project

MI BPM TB Control Module Status Report May 23rd, 2006

Significant changes are highlighted.

MI BPM TB Control Module Production

Hardware status:

-) Work in progress on the "Functional Requirements Specification".
-) Print Circuit Boards received.
-) Almost 8 Modules assembled and tested.
-) Remaining 4 modules assembly/testing in progress, should be completed this week.

Firmware status:

-) Coding work in progress.

MI BPM TB

Firmware status:

-) Conceptual work in progress together with Control Module (production version) design.

Hardware:

-) Defined power cable harness for Analog crate. Thanks to Neal Wilcer, Tim Kasza and Bill Barker. As soon as load test is completed and AD approves CSS will proceed in assembling power cables for all the analog crates.

-) More tests to be done at FCC
(10 "production" TBs, 1 prototype TB and 1 Control Module)
a) Backplane termination scheme, 53 MHz test signal quality
b) Power supplies load test.
c) Software control/interface.
d) Full System test Timing Module > Analog Crate > Echotek

MI BPM TB Control Module Prototype

Hardware status:

-) No activities.

Firmware status (Avnet Xilinx card FPGA):

-) No activities.

Document related to the Control Module are available on the web page:
http://www-ese.fnal.gov/MI_BPM_TB_CTL/

MI BPM Project

MI BPM TB Control Module Time Schedule

As on February 28th, 2006, last modified on May 23th, 2006

New changes in schedule are highlighted. Previous changes in schedule are in blue.

Week beginning on	Task 1	Task 2	Task 3	Task 4	Goals and decisions
February 27th	Design				
March 6th	Design	Schematic			Finalize design
March 13th	Firmware	Schematic			
March 20th	Firmware	Schematic ~~review~~			Minor design changes
March 27th	Firmware	Schematic PCB layout		Parts ordering	
April 3rd	Firmware	Schematic review PCB layout		Parts ordering ~~Parts arrive~~	
April 10th	Firmware	PCB layout	~~PCB quotes~~	Parts arrive	
April 17th	Firmware	PCB layout ~~PCB manufacturing~~	PCB quotes ~~Front panel design~~	Parts arrive	~~Finalize preliminary version of firmware.~~
April 24th	Firmware	PCB Manufacturing Module assembly	~~Front panel manufacturing~~ Front panel design		Finalize preliminary version of firmware. ~~1st Module assembled and tested~~
May 1st		Module assembly	Front panel manufacturing		1st Module assembled and tested May 1st : Does module meets system requirements?
May 8th		Module assembly/ Module testing	Front panel manufacturing		
May 15th		Module assembly/ Module testing			May 15th : All Modules assembled and tested
May 22nd		Module assembly/ Module testing			
May 29th					

Module	0	1	2	3	4	5	6	7	8	9	10	11
100%												
90%												
80%												
70%												
60%												
50%												
40%												
30%												
20%												
10%												

Module Assembly status

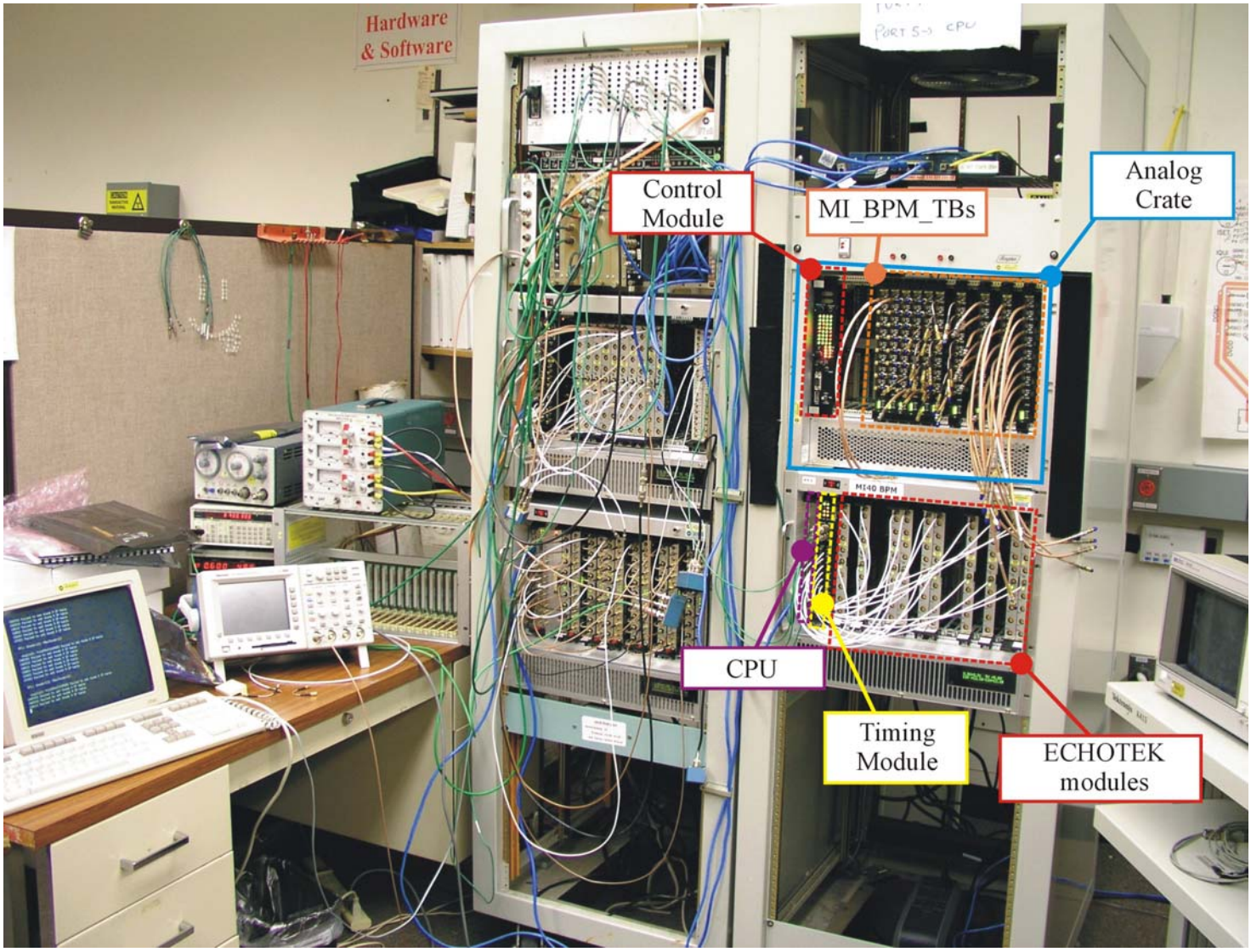

FCC MI BPM Test Area, May 23, 2006

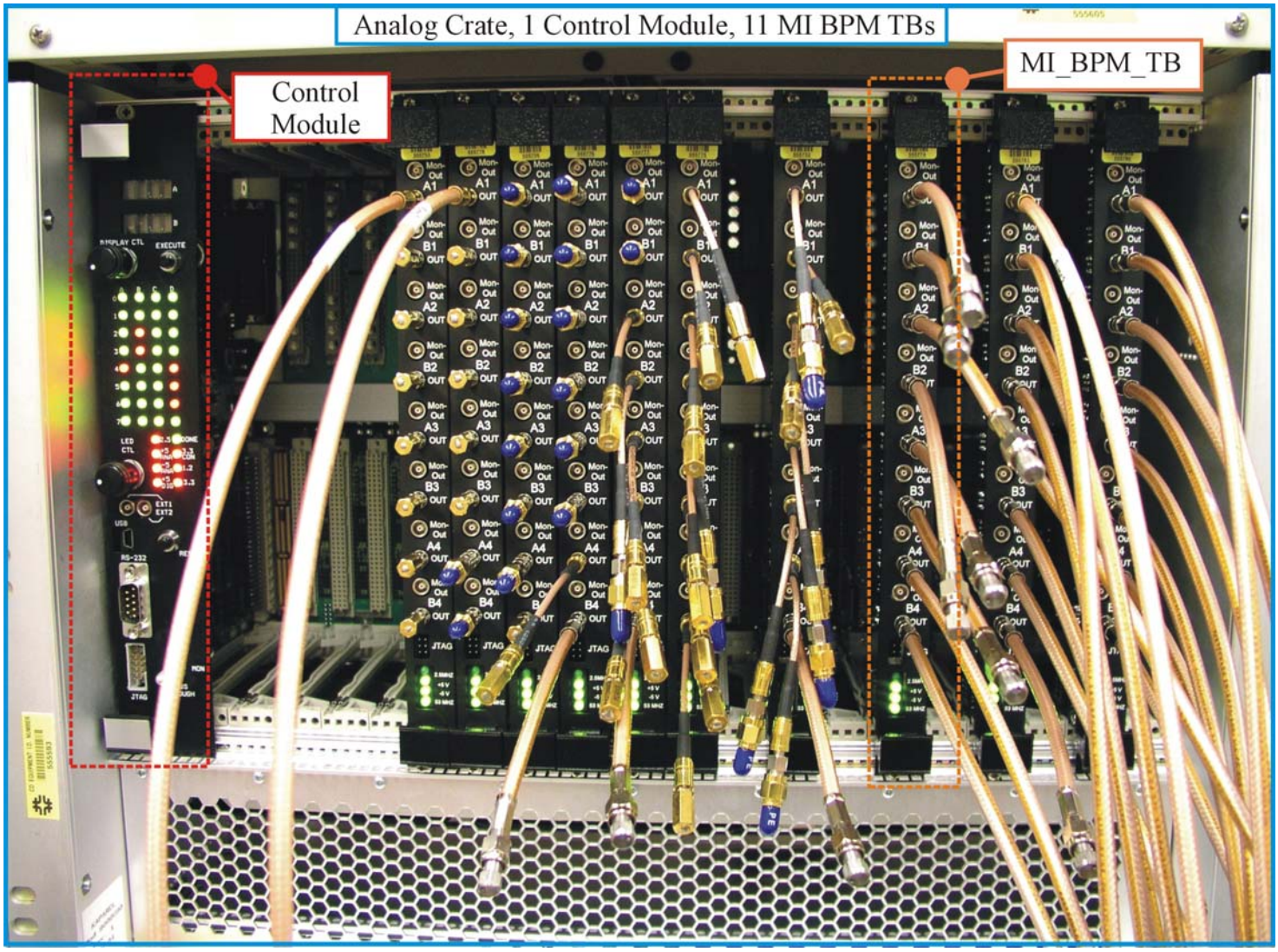

FCC MI BPM Test Area, Analog Crate, May 23, 2006

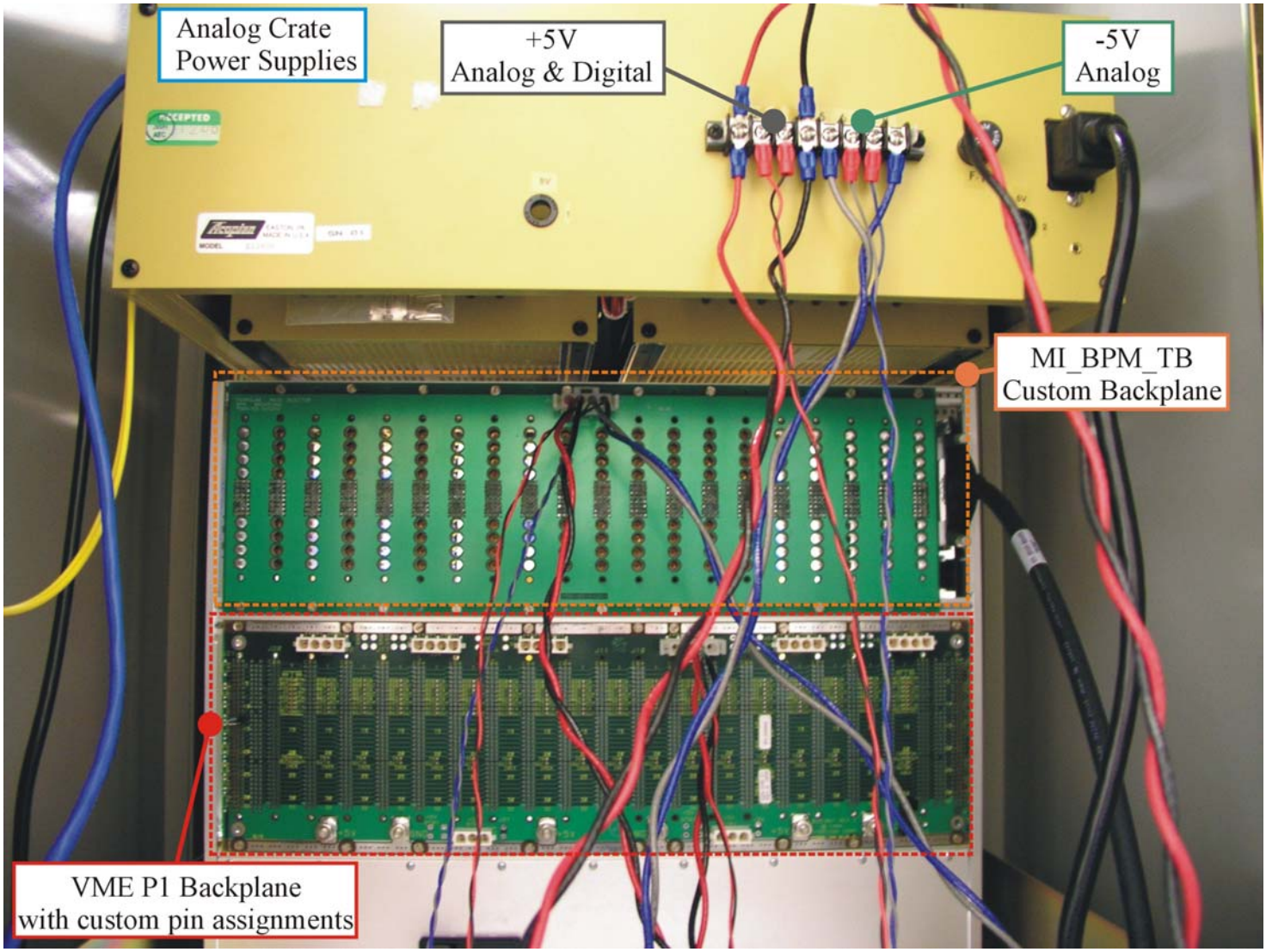

FCC MI BPM Test Area, Analog Crate Power Supplies and Backplanes, May 23, 2006

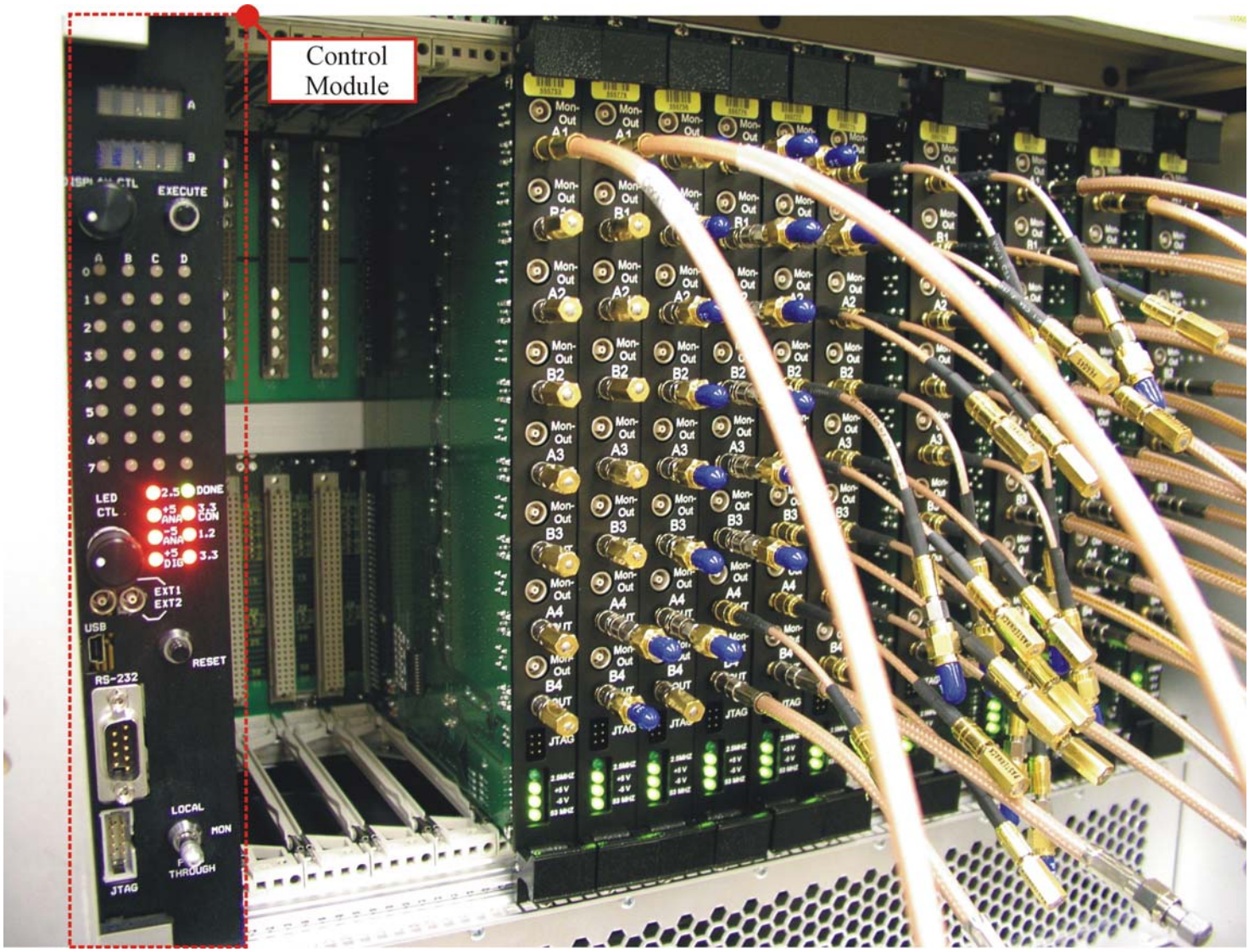

FCC MI BPM Test Area, MI BPM TB Control Module, May 23, 2006