# MI BPM Project

## MI BPM TB Controller Status Report January 31st, 2006, 9:30am

## Hardware status

**MI BPM_TB Controller Prototype:**
-) Total of three modules assembled. Two are at FCC, one is at MI40.
-) Short field trip with Bill HAYNES to support House 44 installation.
-) Worked on Subrack Controller prototype documentation.

## Firmware status:

**MI BPM_TB Firmware**
-) As previously reported work in progress on "non-critical" improvements.

**MI BPM_TB Controller Prototype Firmware (Avnet Xilinx card FPGA)**
-) As previously reported work in progress on "non-critical" improvements.

## Decision point

A decision needs to be made regarding the production hardware.

Should we manufacture the modules based on the current (prototype) design or should we invest more time on an improved design?

**Prototype design:**
-) It works.
-) The production of the modules can be completed in short time.
-) Has minimal diagnostic. Most of it relies on an Avnet-Xilinx daughter card and is meant to be used for bench testing/debugging and not for field operations.

**Improved design:**
-) Design will be based on current working prototype.
-) Front panel user interface and field diagnostics
  a) Will allow to monitor commands sent to the MI BPM TBs
  b) Will allow to operate the subrack in local mode providing the user with full control of the MI BPM TBs settings.
-) More design work required.

**MI40 field trip**

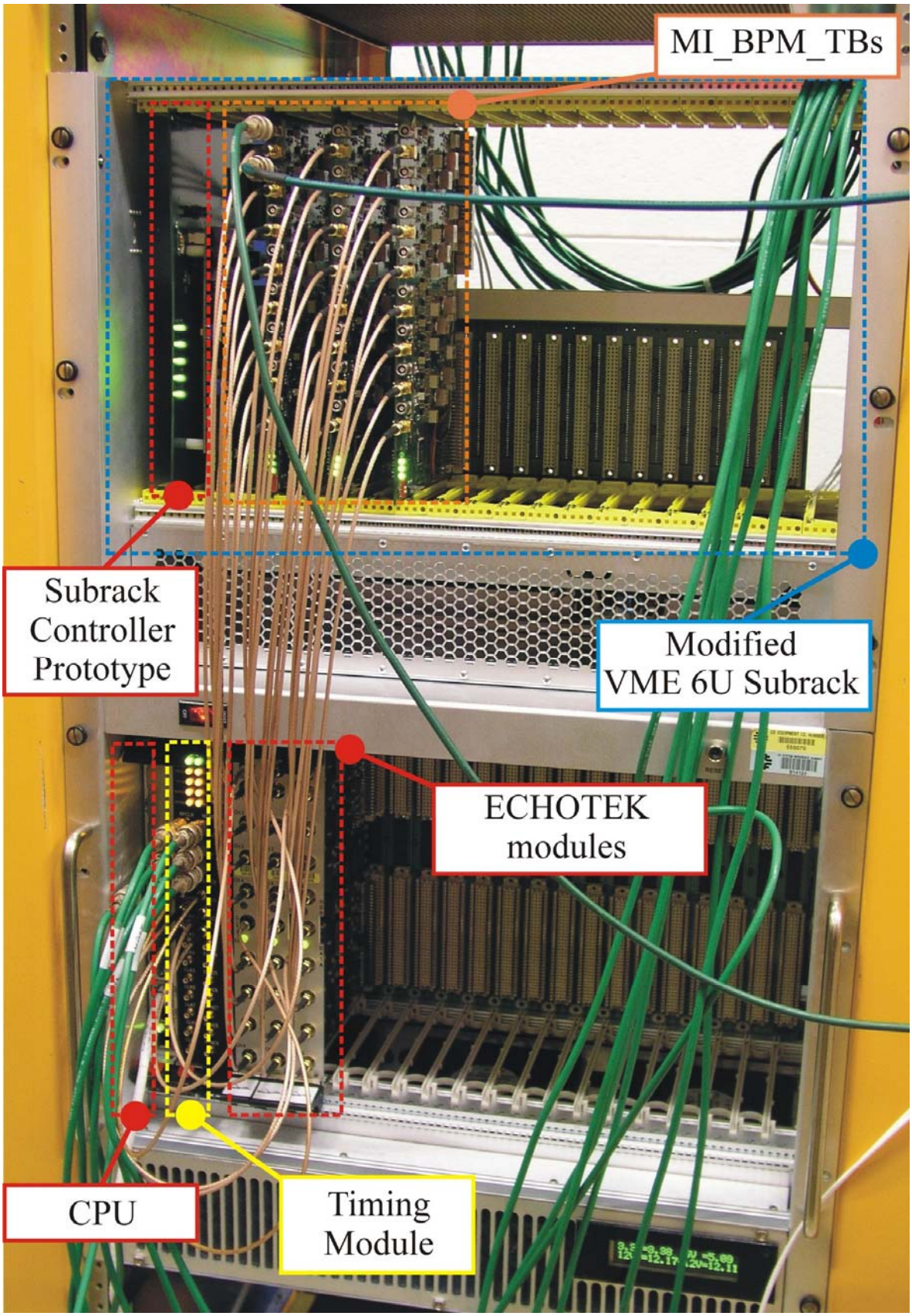

**MI40 field trip**

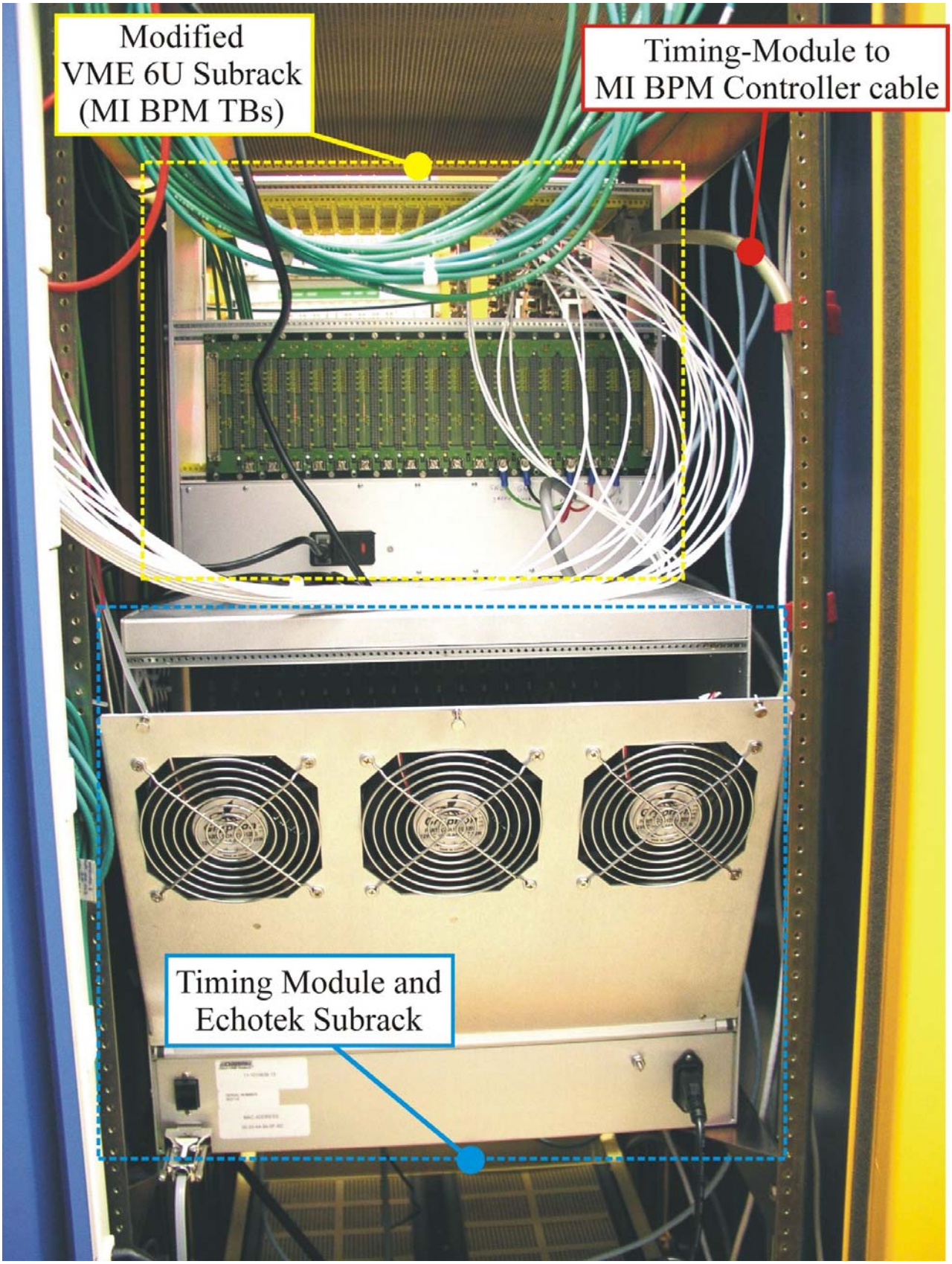

## MI40 field trip

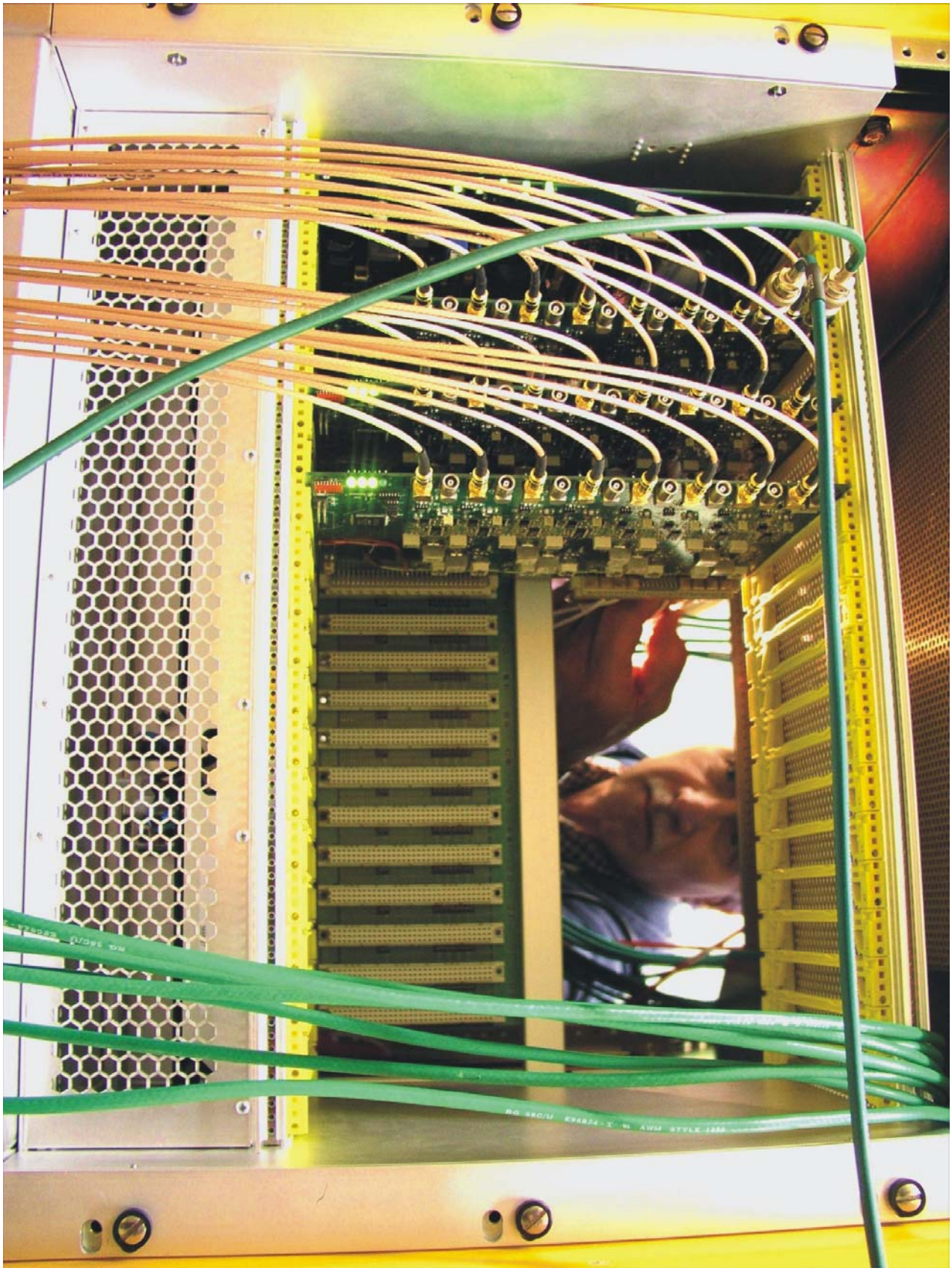
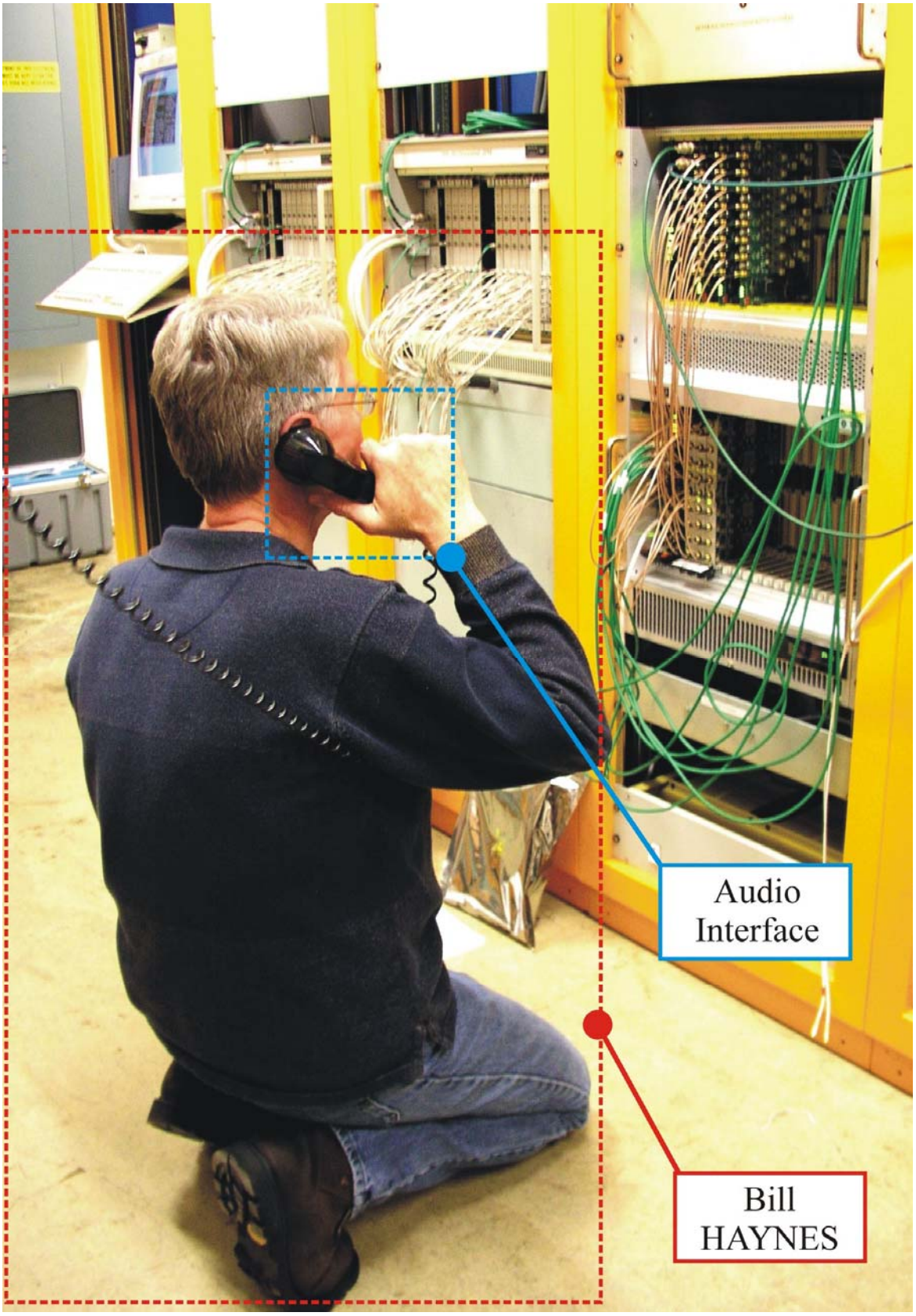
**MI40 field trip**